User Manual

Hybrid Inverter
Eris-5/6/6.6G1-LE

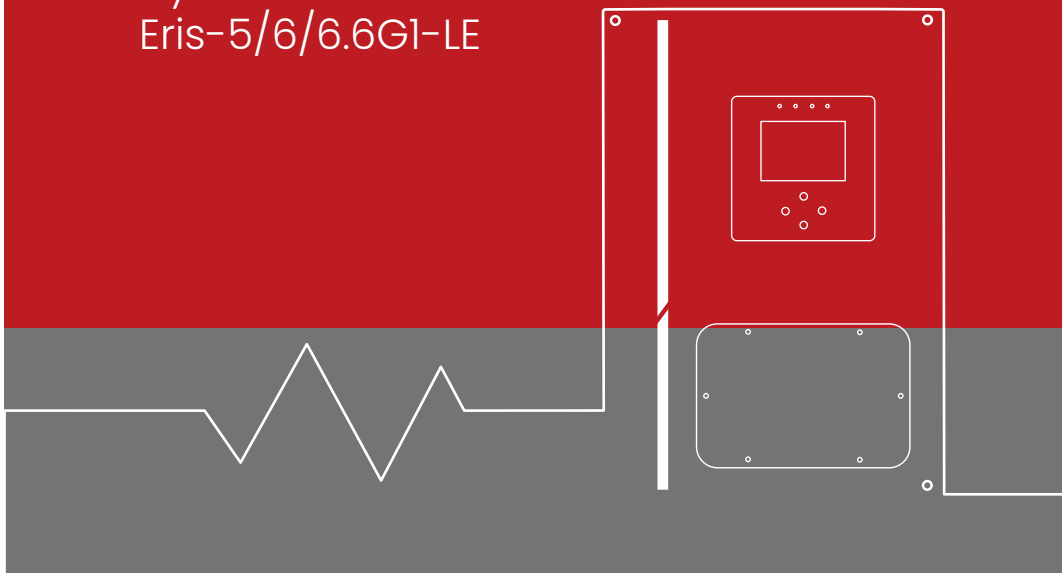

CHISAGE ESS

Tel: +86 150 5749 1826

Email: info@chisagess.com

Web: www.chisagess.com

Add: No.1828, Fuqing South Road, Panhuo Street, Yinzhou District, Ningbo City, Zhejiang Province, China 315000

CE_Eris(5/6/6.6)G1-LE_UserManual_V1.0_EN_20261008

CHISAGE ESS

www.chisagess.com

CONTENTS

Precautions 1
1. Overall Introduction 6
1.1 Overall description 6
1.2 Functional Performance Introduction 6
1.3 Product Appearance 7
1.4 Dimensions 8
1.5 System Structure 9
1.6 Inverter Parameters 10
2. Installation Instructions 11
2.1 Installation Preparation 11
2.1.1 Installation Notes 11
2.1.2 Environment & Space Requirements 11
2.1.3 Tools Preparation 12
2.1.4 Accessories Check 12
2.2 Terminal Introduction 15
2.3 Wall Mounting 16
2.4 Battery Wiring 17
2.4.1 Battery Power Wiring 17
2.4.2 Battery Communication Wiring 18
2.5 Grid, Load and Generator Wiring 19
2.6 PV Wiring 20
2.7 CT Wiring 23
2.8 Meter Wiring 24
2.9 Grounding Wiring 25
2.10 Wi-Fi Connection 25
2.11 System Wiring Diagram 26
3. Display & Settings 27
3.1 Operating Data Interface 27
3.1.1 PV Data 29
3.1.2 Battery Data 29
3.1.3 Inverter Data 30
3.1.4 Grid Data 31
3.1.5 Load Data 31
3.2 Operating Parameter Settings 31
3.2.1 Battery Parameter Settings 32
3.2.2 Grid Parameter Settings 34
3.2.3 Generator Port Function Settings 35
3.2.4 CT Ratio Settings 36
3.2.5 Operation Mode Settings 36
3.2.6 System Settings 37
3.3 Event Display & Device Information 37
3.4 Setting Inverter Parameters via App 38
4. Operation and Maintenance 39
4.1 Commissioning 39
4.2 Standalone Operation and Logic Description 39
4.3 Parallel Operation and Logic Description 40
4.3.1 Setting Path Description 40
4.3.2 Parallel Operation Logic 40
4.3.3 Parallel System Wiring Diagram 40
4.4 Example of 5 Units Parallel to Grid 43
4.4.1 Grid and Load Connection 43
4.4.2 Parallel Communication Connection & Cable Check 43
4.4.3 Grid-connected Startup 45
4.4.4 Off-grid Startup 45
4.4.5 Shutdown 45
4.5 Fault Alarm and Handling 46
4.6 Daily Maintenance Recommendations 51
4.6.1 Daily Inspection 51
4.6.2 Monthly Inspection 51
4.6.3 Quarterly Inspection 51
5. Product Transportation and Storage 52
5.1 Product Transportation Requirements 52
5.1.1 Logistics Transportation 52
5.1.2 Unloading & Handling 52
5.2 Product Storage Environment Requirements 52
6. Legal Statement 53
7. Appendix Documents 54
Appendix 1 Port Definition 54
Appendix 2 CT Specifications 55
Appendix 3 Inverter Parameters 56

Precautions

- Manual Reading Instruction: Read the manual and follow all operating rules before use.
- Personnel Qualification Requirement:Only certified professionals may disassemble or modify the equipment. Unauthorized personnel are prohibited. Contact supplier for maintenance.
- Power-Off Safety Regulation for Maintenance: Before cleaning or inspection, physically disconnect all AC/DC power and external cables, and wait for complete power-off.
- Installation Qualification Requirement:Equipment and battery installation must be performed by qualified professionals.
- Cable Selection Specification: Use cables rated for the circuit current to ensure stability and heat dissipation.
- Explosion Prevention Specification in Battery Area: In battery areas, use only insulated tools; keep metal tools away from terminals to prevent arcing, short circuits, fire, or explosion.
- Terminal Disconnection Sequence: When disconnecting AC/DC terminals, follow the sequence specified in the installation section of this manual.
- Grounding Mandatory Requirement: The equipment must be reliably connected to a permanent protective earth (PE) system with grounding resistance meeting safety standards.
- Local Regulatory Compliance:All installation and wiring must comply with local electrical codes and regulations.
- System Safety Prohibition: Never short-circuit AC output and DC input. Do not connect to the grid if the load output is short-circuited.

Symbol Explanation

This section explains all symbols displayed on the label.

Symbol	Explanation
	CE marking
	High Temperature Hazard The unit will heat up during operation. Do not touch it directly to ensure safety.
	High Voltage Hazard
	Electrical Shock Hazard
	Read the User Manual Carefully
	The unit must not be disposed of with household waste.
	High Voltage Hazard After the inverter is powered off,residual voltage remains;it must be left for 5 minutes.Perform other operations after 5 minutes.

General Safety Instructions

- Before use, read the manual carefully to ensure correct and safe operation of the unit. Keep the user manual in a safe place.
- Follow the installation instructions in this manual and all applicable local laws and regulations during installation.
- The unit must be installed correctly and operated under specified conditions to qualify for warranty coverage.
- It is recommended to use the accessories provided with the shipment; using parts that do not meet the requirements may cause damage to the unit or personal injury.
- Ensure that all wiring is in good condition and that the cable specifications (diameter, length, etc.) meet the unit requirements.
- Do not disassemble any components of the unit. Please refer to the warranty terms; unauthorized disassembly or repair of the unit may pose certain risks and the unit will no longer be eligible for the warranty service.
- The installation location should be away from damp or corrosive substances, and away from flammable and explosive materials.
- Authorized service personnel must use insulated tools when installing or operating this unit.
- The PV module should have IEC 61730 Class A certification.
- Do not touch the positive or negative terminals of the PV connection device. Touching both at the same time is strictly prohibited.
- The energy stored in the unit may cause electrical shock hazards; do not operate the device connectors, grid cables, or PV while powered on.
- After shutting down the PV system, battery, and grid power supply, wait at least 5 minutes for the internal capacitors to discharge before disconnecting the DC connectors, battery connectors, or grid port.
- Use a multimeter with an input impedance of at least 1 MΩ to measure the voltage between the DC+ and DC- terminals. Ensure the voltage is below 35 VDC before servicing the unit.

Anti-Islanding Effect

Islanding refers to a condition in which a grid-connected photovoltaic system continues supplying power to part of the utility grid after grid power has been lost. This poses a danger to maintenance personnel and the public. The inverter uses Active Frequency Drift (AFD) protection to prevent islanding operation.

PE Connection and Leakage Current

A residual current monitoring unit (RCMU) is integrated into the inverter to monitor residual current and provide protection when leakage current exceeds the allowable limit. The type A RCD can be connected to the inverter for protection according to the local laws and regulations if required. At the on-grid port, the RCD residual current rating should be 300 mA (recommended), or it can be set to other values according to local regulations. At the back-up port, the Maximum RCD residual current rating should be 30 mA, or it can be set to other values according to local regulations.

Danger Leakage current!
Connect the grounding device before energizing.

- Improper grounding can lead to personal injury, death, or equipment failure, and increase electromagnetic interference.
- Ensure the size of the grounding conductor meets safety requirements.

For Use in the UK

- The installation of connecting the device to the power terminals should comply with BS 7671 requirements.
- Do not change any protection settings.
- The user must ensure that the installation, design, and operation of the equipment always comply with the requirements of ESQCR 22(1)(a).

For Use in Australia and New Zealand

- Electrical installation and maintenance should be performed by a licensed electrician and should comply with the national wiring rules of Australia and New Zealand.

Battery Safety Operation Instructions

To avoid electric shock and short-circuit current risks caused by batteries, please strictly follow the following protective measures when replacing batteries:

- Use insulated tools.
- Wear rubber shoes and rubber gloves.
- Do not place metal tools or other metal parts on the battery.
- Disconnect the load connected to the battery before removing the battery terminals.
- Only professional personnel are allowed to perform battery maintenance work.

1. Overall Introduction

This manual mainly introduces product information, functional operation, equipment installation and maintenance guidelines. It does not cover the installation and specification information of PV modules.

1.1 Overall description

This product is designed for photovoltaic (PV) and energy storage integrated power generation systems, enabling bidirectional conversion between AC and DC power. Leveraging advanced power electronics control algorithms, it coordinately regulates the power output from PV modules and storage batteries, effectively smoothing the intermittent power fluctuations inherent in PV generation. Through storage inverter technology, it delivers grid-compliant AC power to continuously supply a wide range of electrical loads.

1.2 Functional Performance Introduction

The unit is a hybrid PV-storage inverter that integrates PV generation and battery energy storage management, striking an optimal balance between high energy yield and reliable power delivery. Developed for residential and commercial/industrial storage applications, it supports self-consum -ption storage systems as well as backup power configurations. The inverter operates in both grid connected and off-grid modes, making it adaptable to diverse and demanding operating condition -s. For higher power requirements, multiple units can be paralleled to construct large-capacity storage systems.The system is equipped with a high-performance digital control algorithm that substantially enhances dynamic control performance and improves overall system reliability. The core functional features are as follows:

- Intelligent energy management with selectable multiple operating modes to accommodate diverse application requirements.
- High scalability, different power-rated models can be paralleled; supports up to 20 units in parallel for off-grid operation; enables seamless grid-connected / off-grid switching; provides 110% overload capability.
- Large color touchscreen for local monitoring of overall system and battery operating data; supports remote monitoring via mobile app or cloud platform; enables cloud-based parameter tuning and firmware upgrades.
- IP65 protection rating and easy wall-mounted installation.
- Dual MPPT inputs for flexible PV module configuration.
- Dedicated AC input interface for diesel generator, allowing coordinated operation with the energy storage system.
- Integrated smart load and AC coupling interfaces to cover a wide range of application scenarios.
- Optional PV arc fault detection; standard surge protection on PV circuits.
- Reactive power regulation capability.
- Integrated multiple protections including over-temperature, over-current, short-circuit, and anti-islanding, ensuring safe and reliable system operation.

1.3 Product Appearance

See Figure 1.1 and Table 1.1 for the product appearance and detailed part descriptions.

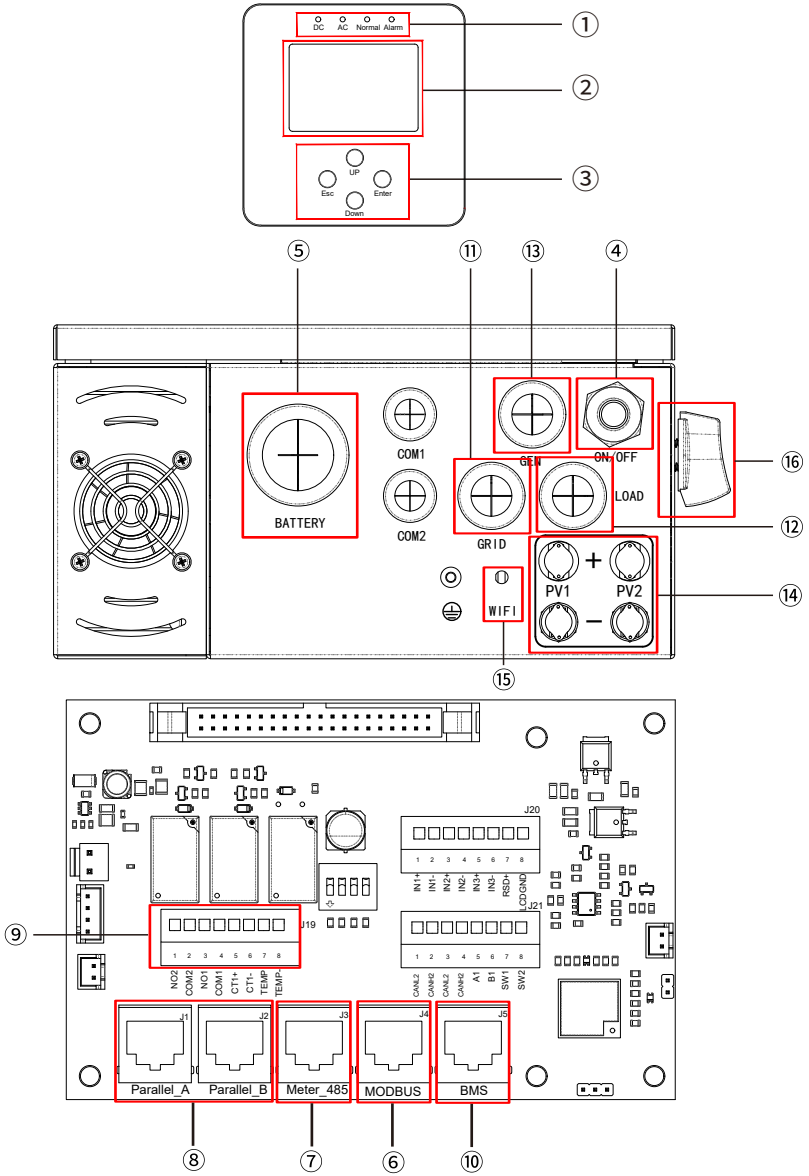

Figure 1.1 Appearance Diagram of Hybrid Inverter

①	Indicator light	⑦	RS485 port (meter)	⑬	Generator port
②	LCD display screen	⑧	Parallel port	⑭	PV input port
③	Function buttons	⑨	CT functional ports	⑮	Wi-Fi port
④	Battery black start button	⑩	BMS port	⑯	PV input knob
⑤	Battery input port	⑪	Grid port		
⑥	Modbus interface	⑫	Load port		

Table 1.1 Product Part Definition List

1.4 Dimensions

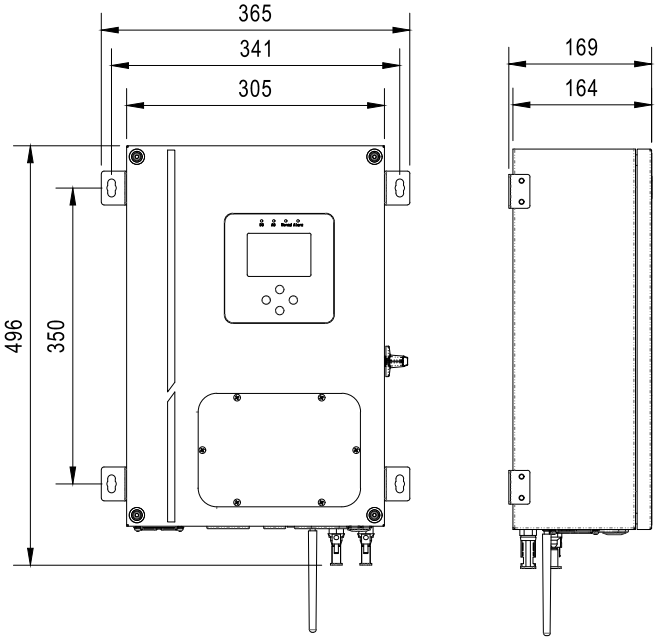

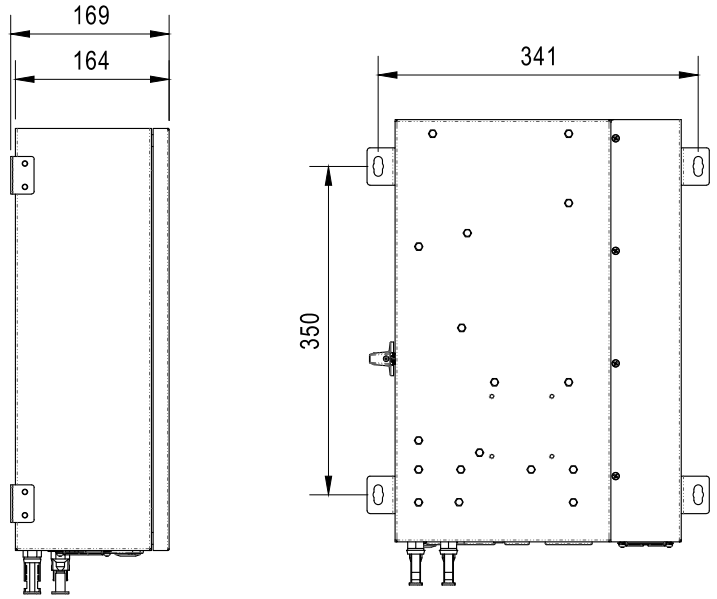

- Dimension(W*H*D)(mm)：365x496x169
- Weight(kg)：19

1.5 System Structure

As shown in Figure 1.2, it illustrates the basic application of Hybrid Inverter. Its complete operating system also includes diesel generators, power grid and PV modules.

You may consult your system integrator for other available system architectures as needed. This device can supply power to various electrical appliances in homes and offices, including motor-driven devices such as refrigerators and air conditioners.

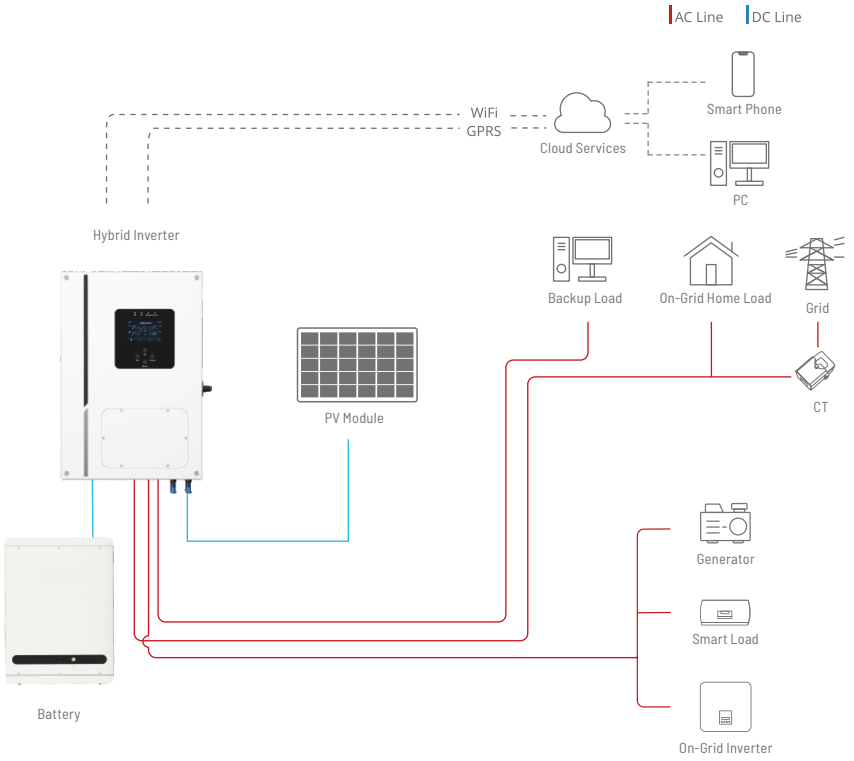

Figure 1.2 System Diagram of Hybrid Inverter

1.6 Inverter Parameters

See Appendix 3.

2. Installation Instructions

2.1 Installation Preparation

2.1.1 Installation Notes

The equipment is rated IP65 and is suitable for outdoor installation. The installation site shall meet the following requirements:

- Avoid prolonged direct sunlight.
- Keep away from flammable material storage areas.
- Do not install in explosion-hazard zones.
- Avoid cold air drafts, e.g., from A/C vents.
- Keep clear of RF equipment such as TV antennas and radios.

2.1.2 Environment & Space Requirements

To ensure stable operation of the equipment, all ventilation ducts and cooling fans around the unit shall not be obstructed. After wall-mounting, a minimum clearance of 500 mm shall be maintained between the unit (top, bottom, and all sides) and adjacent walls. The installation site shall meet the following conditions:

1)Located close to power distribution points to facilitate cabling.

2)Clean environment, free from dust contamination.

3)Installation altitude shall not exceed 2000 m. If the altitude exceeds this limit, the equip -ment shall be derated in accordance with applicable national standards.

4)Operating ambient temperature range: –20°C to +60°C.

5)Free from corrosive, explosive, or insulation-damaging gases, as well as conductive dust; keep away from all heat sources.

6)The installation position shall be free from continuous vibration or shock; the vertical tilt angle of the unit shall not exceed 5°.

7)Long-term operation in an air-conditioned environment with a constant temperature of 20°C can effectively improve system reliability and extend the service life of the equipment.

Additional site requirements for installation:

- The equipment shall be mounted on a solid vertical wall with sufficient load-bearing capacity.
- Non-combustible walls such as concrete are the preferred option. Refer to Figure 2.1 for the mounting method.
- The installation height shall be at eye level to facilitate real-time viewing of the LCD screen data.
- Sufficient space shall be reserved around the equipment to accommodate heat dissipation, cabling, and future maintenance access. A clearance of 500 mm shall be maintained on all sides to ensure adequate air circulation for cooling.

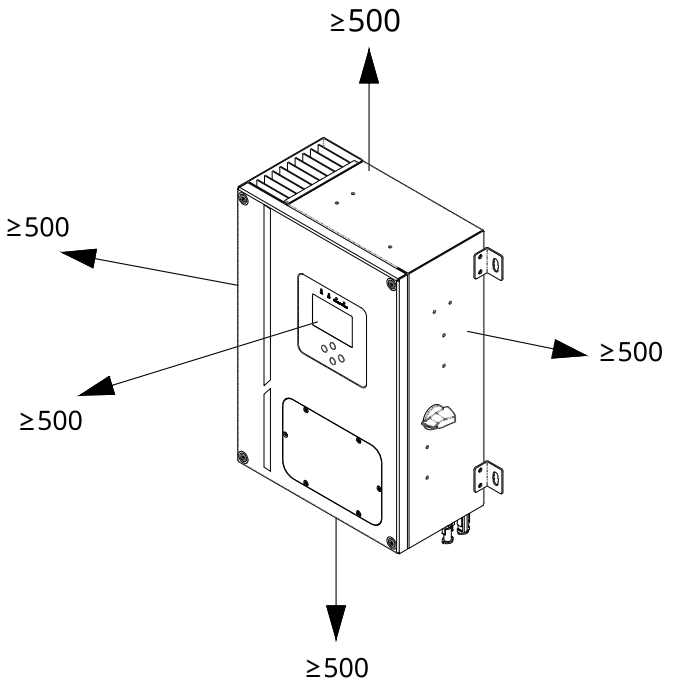

All dimensions in mm

Figure 2.1 Recommended Clearance Dimensions Around the Device

2.1.3 Tools Preparation

Phillips screwdriver (Model: PH2, moderate length);Wrenches or sockets with diameters of 5.5 mm, 10 mm and 13 mm (for M3, M6, M8 hexagon bolts).

2.1.4 Accessories Check

Prior to unpacking and installation, a visual inspection of the complete unit shall be carried out to confirm that the outer packaging is free from impact damage or breakage. The equipment packing box shall contain all accessories listed in Figure 2.2 and Table 2.1; installation may proceed only after the inventory has been verified and found to be complete.

No.	Material Name / Specification	Quantity	Remarks
1	Inverter (Main Unit)	1	
2	User Manual	1	Placed inside carton
3	Delivery Inspection Report	1	
4	Certificate of approval	1	
5	Warranty Card	1	
6	Mounting Bracket	1	
7	M8×80 stainless steel internal expansion bolts	4	For chassis fixing
8	Desiccant	1	Placed inside carton
9	PV Connector male/MC4	2	
10	PV Connector female/MC4	2	
11	Wi-Fi Antenna	1	
12	Ethernet Cable-2m	1	
13	CAN Parallel Cable-2m	1	(Optional)
14	NTC Temperature Sensor	1	(Optional)
15	Current Sensor CTSA016 100 A/50 mA	1	
16	Smart Meter/SDM230	1	(Optional)

Table 2.1 Product List Detail

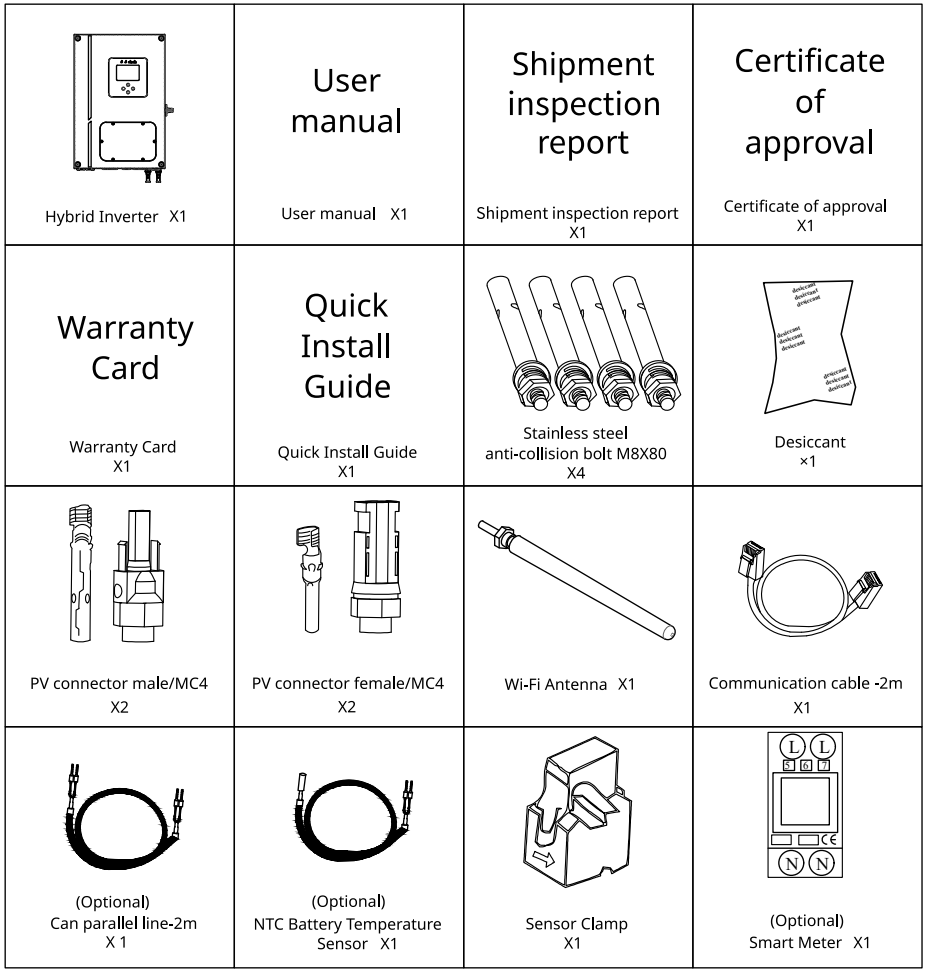

Figure 2.2 Product List Detail Drawing

2.2 Terminal Introduction

Buttons see Figure2.3; Bottom Terminal Definition see Figure2.4; The External Interface Board see Figure2.5.Equipment Schematic see Figure2.6.

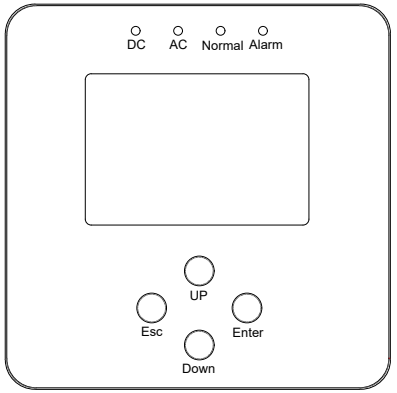

Figure 2.3 Button Diagram

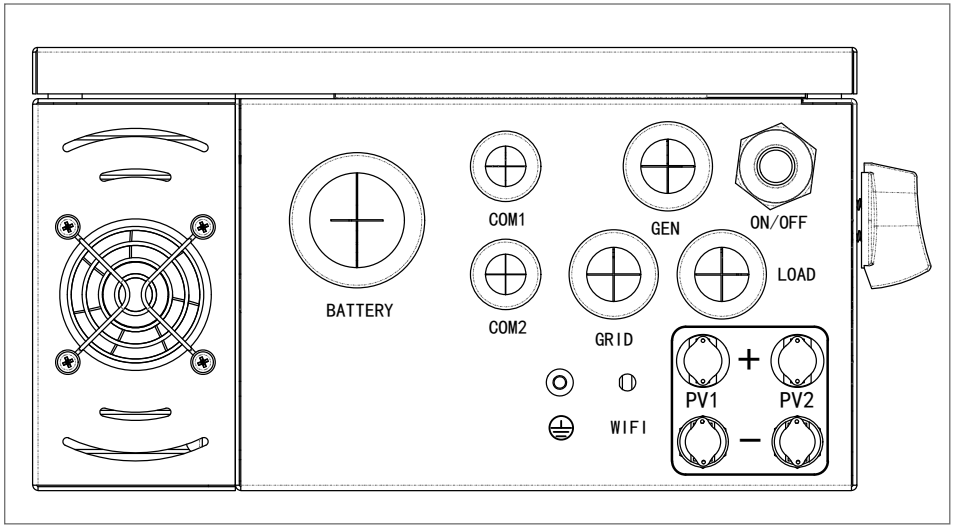

Figure 2.4 Bottom Terminal Definition

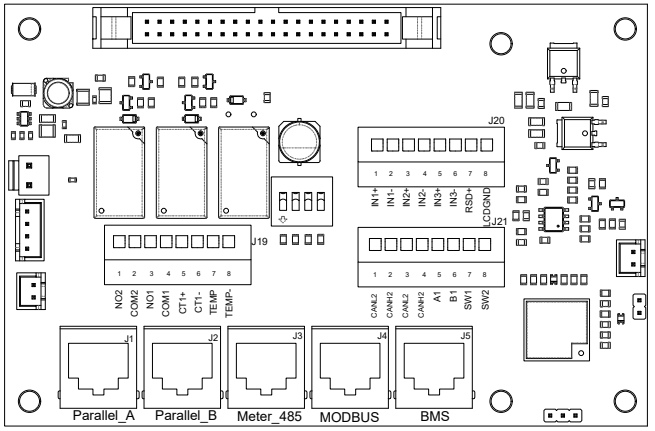

Figure 2.5 The External Interface Board

Interface definition see Appendix 1

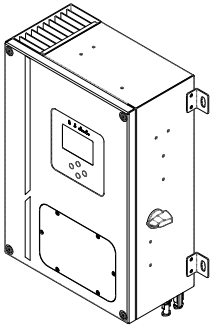

Figure 2.6 Equipment Schematic

2.3 Wall Mounting

Note: The enclosure of the complete unit is relatively heavy. When removing the unit from the packing box, it shall be handled with care to avoid impacts or damage.!

- Take out main bracket, mark wall per four-bolt positioning size on bracket panel center.
- Select recommended drill bit, drill 4 holes 52-60 mm deep at marked positions (see Fig.2.8). Hammer expansion bolts into holes, fix rear cover onto bolts and tighten screws.

- Hold the device, align mounting holes with rear bracket, mount onto fixed rear cover (see Fig.2.7). Align side holes and fasten 4 bolts to finish installation.

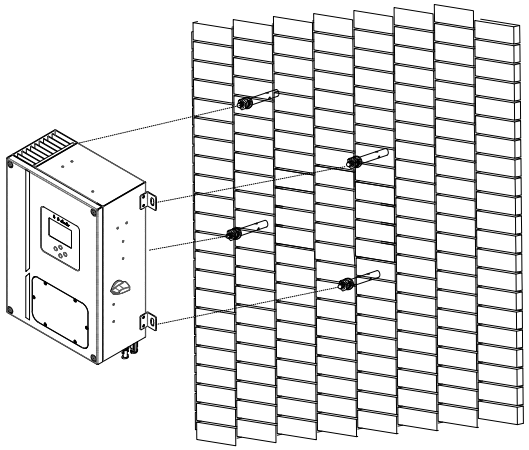

Figure 2.7 Drilling Position Diagram

2.4 Battery Wiring

To meet operational safety and electrical compliance requirements, an independent DC isolation circuit breaker must be installed between the battery and the unit. Although some applications do not require frequent switching operations of this breaker, the isolating device shall still be provided to enable complete disconnection of the DC circuit during maintenance. For selection parameters of fuses and DC circuit breakers, refer to Table 2.2.

2.4.1 Battery Power Wiring

To ensure personnel safety and reliable operation of the equipment, cables used for the battery power circuit shall meet the required voltage rating and current-carrying capacity. To avoid risks of overheating and electric shock, cable specifications should be selected according to the recommended parameters provided in Table 2.2.

	Rated Power(kW)	Cable Size(AWG)	Cable Size(mm^2)	Torque Value(N·m)
Bat Side	6	2	35	12.0
	5	2	35	12.0
	4	6	16	12.0
	3	6	16	12.0

	Rated Power(kW)	Cable Size(AWG)	Cable Size(mm^2)	Breaker Current(A)
AC Side	6	10	6	40
	5	12	4	30
	4	12	4	30
	3	12	4	30

Table 2.2 Recommended Cable Examples

All wiring must be performed by professionals!

Select suitable battery cables and bolts, and insert cables correctly into the Battery pass-through openings as shown in Figure 2.4 Bottom Socket Terminal Definition Diagram.tly mat(Note: Stricch positive (+) and negative (-) poles for wiring);Battery terminal installation: Pass battery cables through cable protective covers in advance. Unscrew the bolts with a proper screwdriver, fit on cable terminals, then tighten bolts clockwise with a torque of 12.0N·m. Ensure correct polarity connection between batteries and inverter.

Before completing the DC wiring or closing the DC circuit breaker, it must be verified that the positive (+) terminal is connected to the positive (+) terminal and the negative (–) terminal is connected to the negative (–) terminal.

2.4.2 Battery Communication Wiring

As shown in Figure 2.8, connect the BMS interface of the BAT_PACK battery pack to the BMS communication port of the unit. For the communication cable pin definitions, refer to Appendix 1. (In actual wiring practice, the BMS communication cable and the battery power cables shall be routed separately from their respective ports; this schematic diagram is intended for illustrative purposes only to indicate the connection locations.)

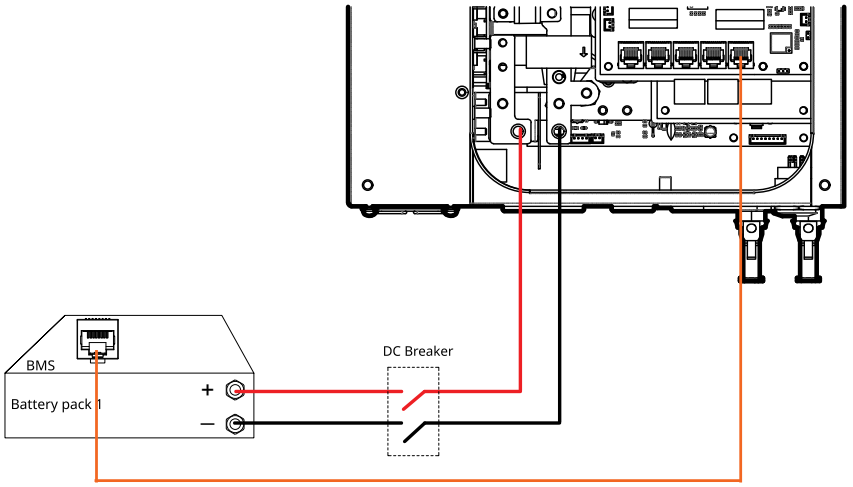

Figure 2.8 Battery Connection Schematic Diagram

2.5 Grid, Load and Generator Wiring

Install separate AC circuit breakers between the device and grid, as well as between backup load and device before grid connection, to safely disconnect the inverter during maintenance and prevent overcurrent damage. The suggested AC cable is 12AWG with a cross-sectional area of 4~6 mm² per core.

The device is equipped with three terminals: GRID, LOAD and GEN. Avoid wrong connection. The GEN terminal can be connected to diesel generators, smart loads or AC coupling units. Set the corresponding interface type on the LCD after wiring; refer to Section 3.2.3 in Chapter 3 for detailed settings.

All wiring shall be completed by professionals in accordance with Figure 2.9 to ensure safe and efficient system operation.

Ensure AC power is disconnected before connection!

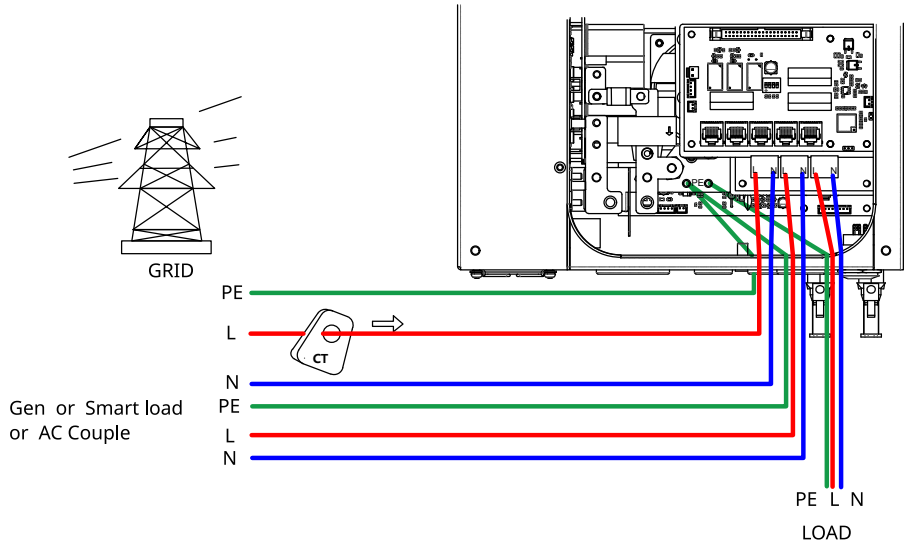

Figure 2.9 Grid, Load and Generator Connection Diagram

Connection steps for Grid, Load and Generator ports

- Ensure all AC circuit breakers and disconnectors are closed before connection.
- Strip 10 mm insulation, insert wires per terminal polarity, tighten bolts firmly.
- Connect neutral L wire, N wire and earth PE wire accordingly, fasten all AC output terminals.
- Air conditioners need 2-3 minutes to restart to balance refrigerant gas in the circuit.Short power cuts and quick power restoration may damage connected appliances.Check if the air conditioner has delay protection before installation. Without it, the device may cut off output due to overload protection, which may cause internal faults in the air conditioner.

2.6 PV Wiring

Install an independent DC breaker between the device and PV modules before connection. Proper PV cables ensure safe and efficient system operation. 12AWG (4 mm²) cables are recommended to reduce safety risks.

To avoid the risk of equipment failure, PV modules with potential leakage hazards must never be connected to this unit. Grounded PV modules may cause leakage current to flow into the equipment, resulting in abnormal malfunctions.

PV modules must not be grounded!

- Refer to Table 2.3 for parameters when selecting PV modules:
  1) PV module open-circuit voltage (Voc) shall not exceed the maximum open-circuit voltage of the hybrid inverter.
  2) PV module open-circuit voltage (Voc) shall be higher than the minimum startup voltage of the hybrid inverter.

Item	5kW	6kW	6.6kW
PV input voltage(V)	370(60~500)		
MPPT voltage range(V)	60-425		
Number of MPPT trackers	2		
Number of Strings per MPPT tracker	1+1	1+1	1+1

Table 2.3 PV Module Selection Instructions Table

- PV module wiring
  1)Turn off the main AC grid circuit breaker.
  2)Turn off the DC circuit breaker.
  3)Assemble PV input connectors to the bottom of the device.

- **Never ground PV positive/negative poles to avoid inverter damage.**
- **Match PV output polarity with DC+ and DC-.**
- **Use 4mm² qualified DC cables.**
- **Keep PV open-circuit voltage below 500V before connection.**

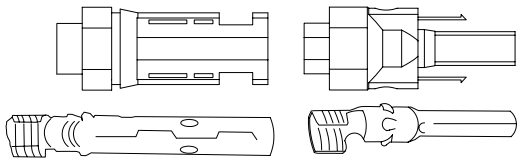

Figure 2.10 PV Input Connectors: DC+ Connector (Left), DC- Connector (Right)

- Steps for assembling DC connectors are as follows:
  1) Strip about 7 mm of insulation off DC wire and remove connector cap nut (See Figure 2.12).

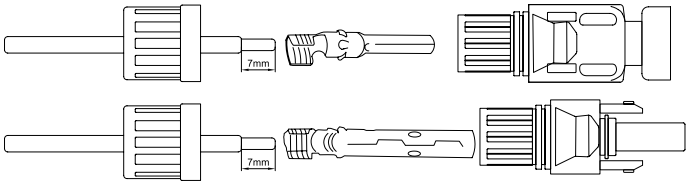

Figure 2.11 Connector Cap Nut

2) Crimp metal terminals with crimping pliers as shown in Figure 2.12.

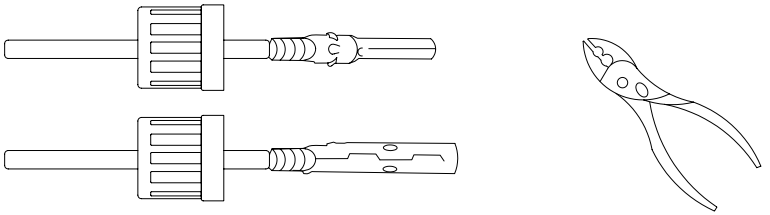

Figure 2.12 Terminal Crimping Diagram

3) Insert the pin into the top of the connector, then screw the cap nut onto it. (See Figure 2.13)
4) Finally insert the PV DC connectors into the positive and negative input terminals of the machine. (See Figure 2.14)

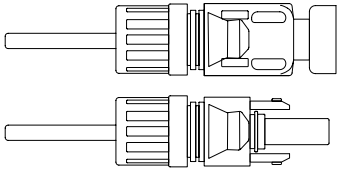

Figure 2.13 Contact Pin Assembly Diagram

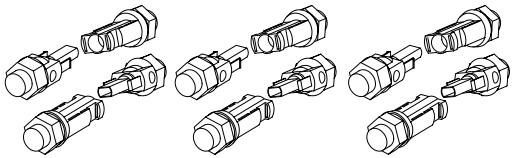

Figure 2.14 DC Connector Input Connection Diagram

Warning: Sunlight on PV panels generates voltage. Series high voltage poses fatal risks. Cover panels with opaque materials and turn off DC switches before connecting PV DC cables to avoid electric hazard.

2.7 CT Wiring

Pass single-phase wire through CT as shown in Figure 2.15, align CT direction arrow towards the device. Connect CT sampling wires and battery temperature signal wires to spring terminals of external interface board.

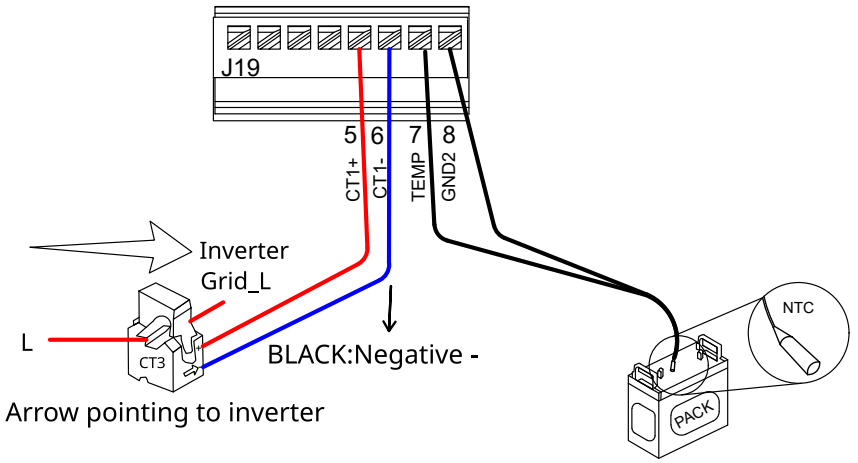

Figure 2.15 Diagram of External CT Wiring and Battery Temperature Sampling Wiring

2.8 Meter Wiring

The wiring diagram of the electricity meter is illustrated in Figure 2.16.

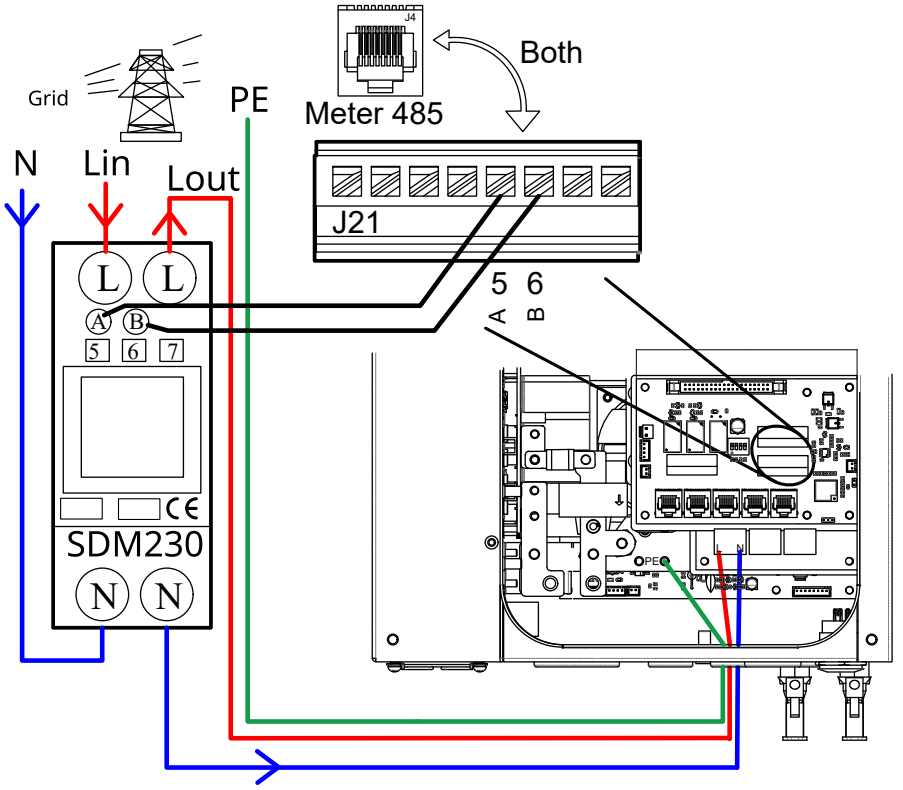

Figure 2.16 Electricity Meter Wiring Diagram

2.9 Grounding Wiring

Connect the ground wire to the protective earthing terminal to prevent electric shock. Fasten the ground wire to the bolt shown in Figure 2.17.

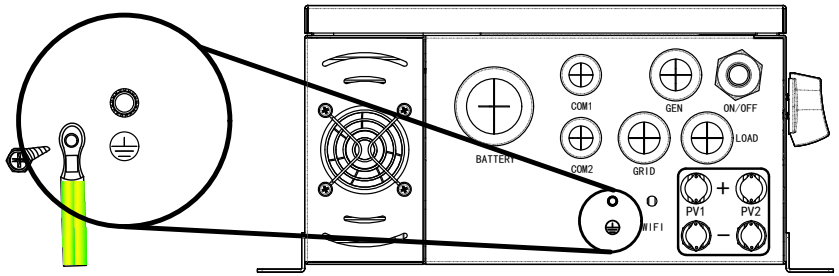

Figure 2.17 Equipment Grounding Diagram

Ground Wire Installation Precautions

1.Recommended ground wire size: 4-6 mm² cable.

2.Arrange ground wire harness prior to other wiring harnesses.

3.Remove the ground wire harness last when disassembling the device.

4.Install ground wire firmly; poor contact causes electric shock risks.

2.10 Wi-Fi Connection

For Wi-Fi configuration, please refer to the Wi-Fi socket wiring diagram. For more details, see the Wi-Fi socket user manual.

2.11 System Wiring Diagram

Version E is applicable to areas where neutral wire (N) and protective earth wire (PE) are separately arranged in distribution boxes, such as China, Germany, Italy and most other countries.

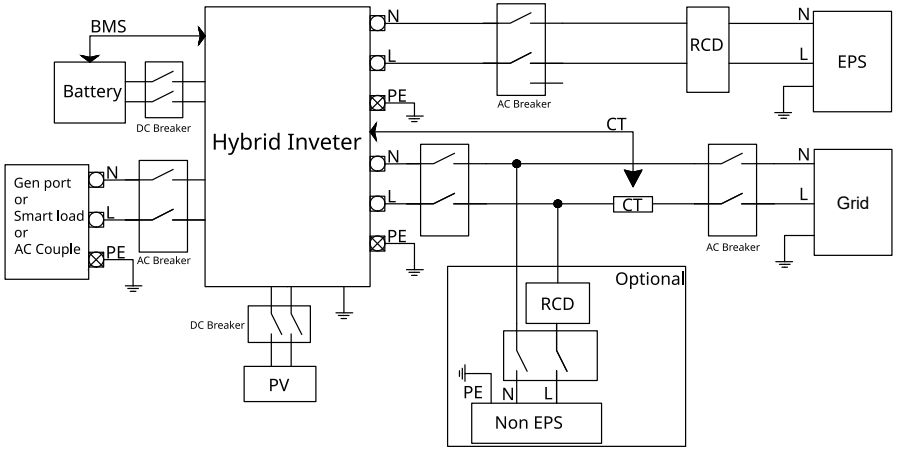

Version I applies to regions where neutral wire (N) is connected with protective earth wire (PE) in distribution boxes, such as Australia, New Zealand, South Africa and other regions.

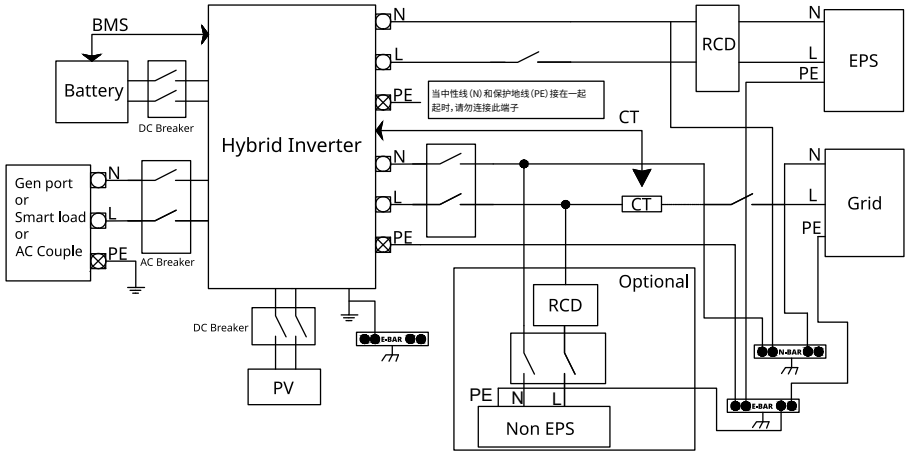

Figure 2.18 System Wiring Diagram

3. Display & Settings

3.1 Operating Data Interface

Note: LCD setting password: 8888

The topology of LCD screen is shown in Figure 3.1, and the main interface is shown in Figure 3.2.

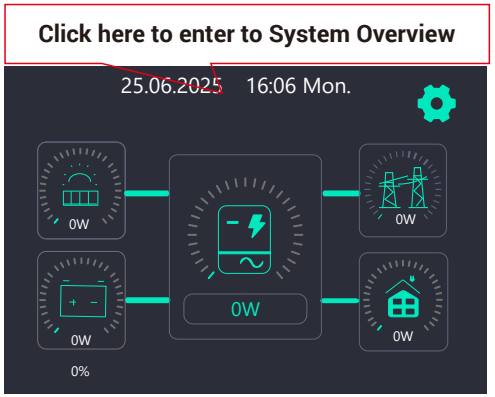

Figure 3.2 LCD Main Interface Diagram

1.The main screen displays information related to PV, grid, inverter, load, and battery.

2.A negative grid power value indicates feeding power to the grid (selling electricity), while a positive value indicates drawing power from the grid (buying electricity).

3.A negative battery power value indicates that the battery is charging, while a positive value indicates that it is discharging.

4.PV output power is always positive.

5.The function icons at the bottom are, in order: "Home", "Setting", "Events", and "Device Info".

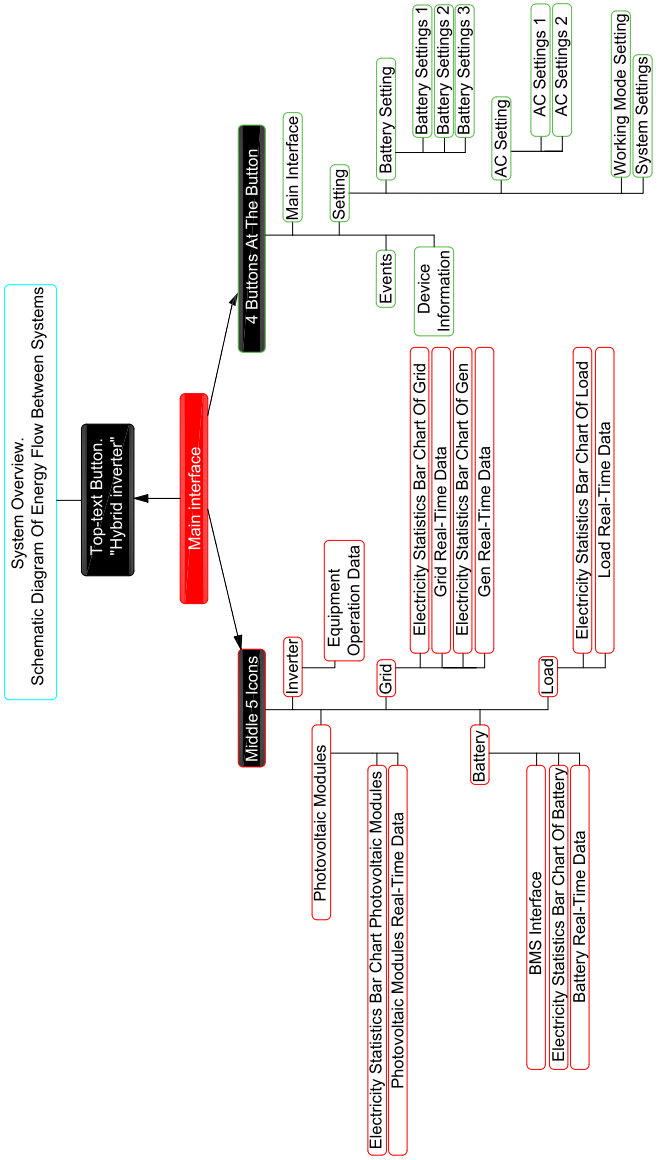

Figure 3.1 LCD Topology Diagram

3.1.1 PV Data

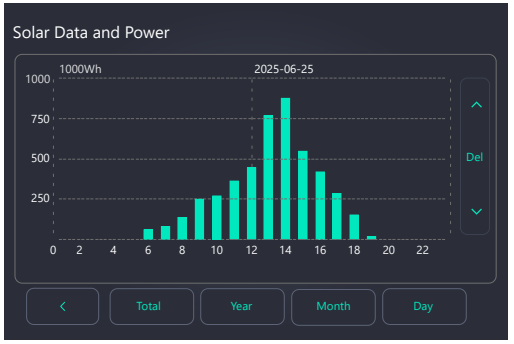

Click the solar panel icon on the main interface to view PV voltage, current, status and power generation. See below for PV stages and Table 3.1 for stage definitions.

Stage	Number	Illustrate
PV Stage	101	Shutdown
	201	
	231	
	98	Standby
	30	Normal working

Table 3.1 PV Stage Description

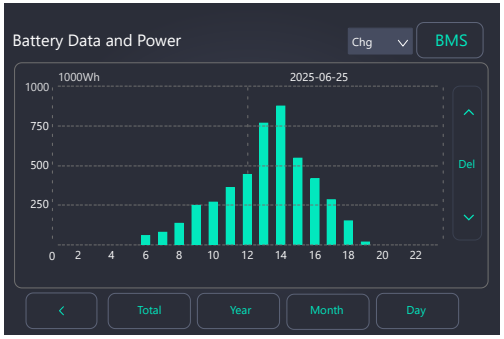

3.1.2 Battery Data

Click the battery icon on the main interface to view battery data, BMS information and battery status as shown above.Refer to Table 3.2 for battery stage definitions.

Stage	Number	Illustrate
Bat Stage	101	Shutdown
	201	
	231	
	98	Standby
	10	Normal working

Table 3.2 Bat Stage Description

3.1.3 Inverter Data



Click the central inverter icon on the main interface to check the voltage, current, frequency and power of inverter, power grid and CT side. The inverter operating stage and mode can be viewed on the right side of the interface. Normally, the normal working mode is 8 and standby mode is 0. Refer to Table 3.3 for inverter stages.

The meanings of Stage on the interface is shown in Table 3.3.

Stage	Number	Illustrate
INV Stage	101	Shutdown
	201	
	231	
	90	Wait for DC to power on
	89	Standby
	30	Normal on-grid operation
	10	Normal off-grid operation

Table 3.3 INV-Stage Description

3.1.4 Grid Data

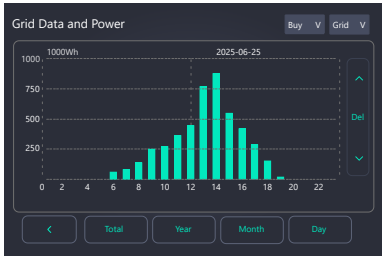

Click the Grid icon on the main interface to view data such as grid voltage, current, frequency and power.

3.1.5 Load Data

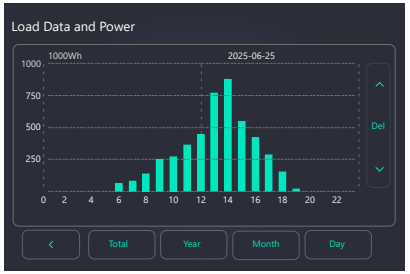

Click the Load icon on the main interface to view grid voltage, current and power consumption of the load.

3.2 Operating Parameter Settings

Note: The password for LCD setting of this device is 8888.

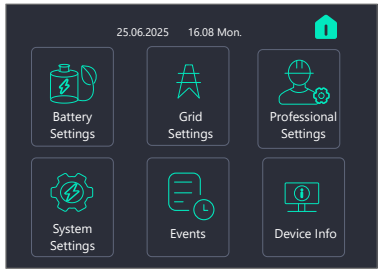

Click the Setting icon on the main interface to enter system settings. Its submenus include Battery Setting, Grid Setting, Professional Setting and System Setting.

3.2.1 Battery Parameter Settings

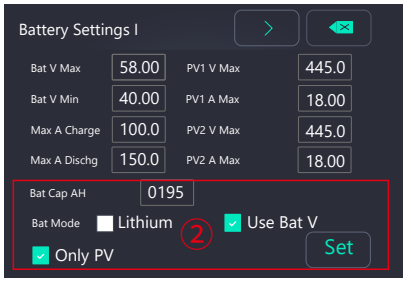

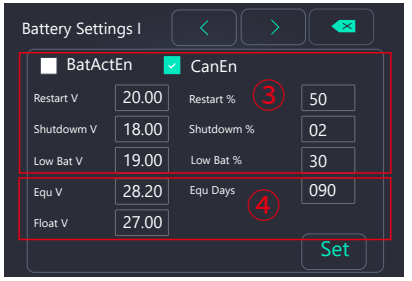

Battery Setting 1 is the basic battery setting interface.

① Battery and PV Settings
Bat V Max: Maximum operating voltage of battery.
Bat V Min: Minimum operating voltage of battery.
Max A Charge: Maximum battery charging current.
Max A Dischg: Maximum battery discharging current.
Bat Cap AH: Battery pack capacity.
PV1 V Max: Maximum open-circuit voltage of Pv1.
PV1 A Max: Maximum open-circuit current of Pv1.
PV2 V Max: Maximum open-circuit voltage of Pv2.
PV2 A Max: Maximum open-circuit current of Pv2.

② Battery Mode Selection
Bat Mode: Select either "Lithium" or "Use Bat V" for setting. This affects the activation of Item and Battery Setting 2. The inverter will operate the battery according to your selection.
Only PV:Only PV: Enable the inverter to start and run solely by photovoltaic power.

③ Maintenance settings for battery voltage/SOC control
BatActEn: Battery automatic activation enable. When checked, the device will automatically reactivate the battery after battery protection is triggered.
CanEn: Battery CAN communication enable. Check this item when CAN is selected as the battery communication mode in system settings.
Shutdown %/V: The device cuts off output when battery SOC/voltage drops below the set value (valid for off-grid mode).
Low Bat %/V: The device triggers an alarm when battery SOC/voltage reaches the set value.
Restart %/V: The device resumes operation and restores AC output when battery SOC/voltage rises to the set value (valid for off-grid mode).

④Battery Maintenance Settings
Float V: Float charge voltage, the maximum charging voltage of battery under voltage control mode.
Equ V: Equalizing charge voltage, the maximum charging voltage for regular battery maintenance.
Equ days: Equalizing charge interval, regular battery maintenance cycle.

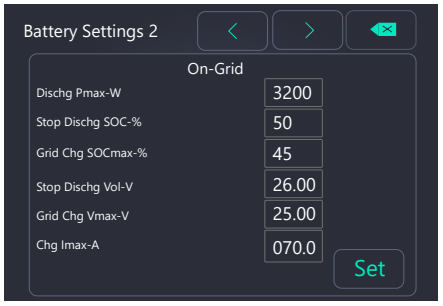

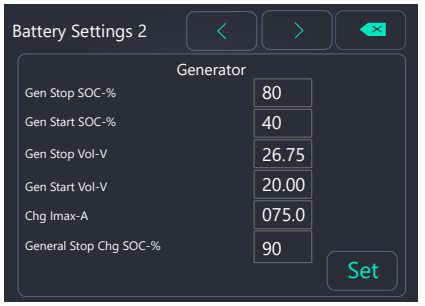

Battery Setting 2 interface is used for battery configuration under the condition of grid, generator and photovoltaic power supply.

On-grid
Dischg Pmax-W : Maximum discharge power to grid under on-grid mode.
Stop Dischg SOC-%/V: Battery SOC/voltage thresh old to stop discharging on grid.
Grid Chg SOCmax-%/V : Max SOC/voltage limit for grid charging.
Chg Imax-A: Maximum charging current from grid to battery.

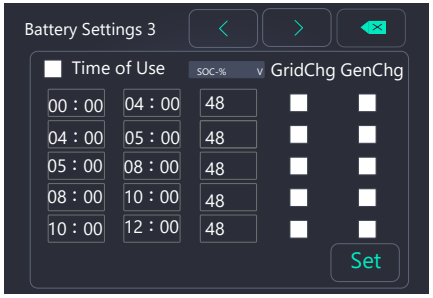

Battery Setting3 interface is for time curve operation mode settings. Enable by checking Time of Use, then set values for Power-W, SOC% and Bat-v.Power-W limits battery power selling and load-bearing power. SOC% and Bat-v serve as charge/discharge cut-off thresholds. Check Grid/GenChg to enable battery charging via grid or generator within specified time periods.

3.2.2 Grid Parameter Settings



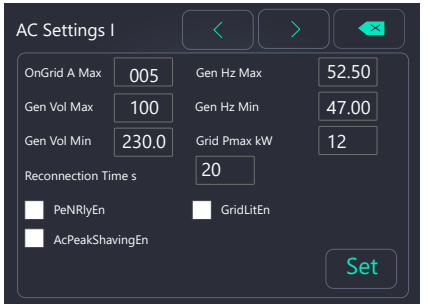

Click Grid Setting, you can configure electricity grid and generator parameters in AC Setting1.

Grid Hz Max: Maximum grid connection frequency.
Grid Hz Min: Minimum grid connection frequency.
Grid Vol Max: Maximum grid connection voltage.
Grid Vol Min: Minimum grid connection voltage.
INV HZ Rated: Rated inverter output frequency, controls frequency in off-grid mode and follows grid frequency in on-grid mode.
INVUpRate:Inverterrated output voltage.Controls output voltage in off-grid mode,follows grid voltage in on-grid mode.

Gen Hz Max: Maximum grid-connected frequency of generator.
Gen Hz Min: Minimum grid-connected frequency of generator.
Gen Vol Max: Maximum grid-connected voltage of generator.
Gen Vol Min: Minimum grid-connected voltage of generator.
OnGrid A Max: Maximum on-grid current.
Grid Pmax kW:Maximum power limit of the grid.

Reconnection Times: Automatic grid reconnection time.
PeNRlyEn: N-line grounding enable, control relay connection between PE and N (valid in off-grid mode).
GridLitEn:Grid power limit enable, activate maximum grid power restriction.
AcPeakShavingEn:AC peak shaving enable, works with grid power limit to turn on grid peakshaving function.

3.2.3 Generator Port Function Settings

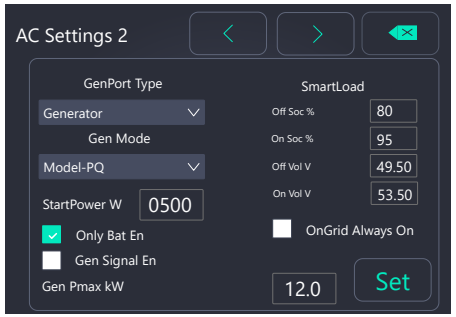

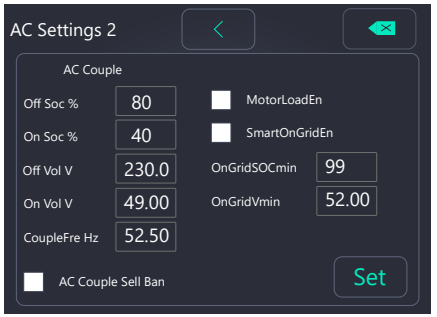

In AC Setting 2, you can select the actual device connected to the GEN port.

Smart Loads Mode Setting Instructions
StartPower W: Smart load startup power setting. The inverter supplies power to smart loads when photovoltaic power exceeds this value.
Off SOC/Vol V/%: Stop powering smart loads when battery SOC/voltage is lower than the set value.
On SOC/Vol V/%: Start powering smart loads when battery SOC/voltage is higher than the set value.
Only Bat En: When battery SOC/voltage is above the startup value, the system continuously powers smart loads; power supply will be cut off once below the stop value.
OnGrid Always on: The system keeps supplying power to smart loads all the time when the inverter works in on-grid mode.

Generator Mode Setting Instructions
Gen Pmax kW: Maximum power of external generator, the system adjusts operation based on this value.
Gen Signal En: Enable generator signal output, including start and stop control.
Gen Mode: PQ is selected by default.
SmartOnGridEn: Enable smart loads under on-grid condition (cooperate with OnGridSOC/Vmin).OnGridSOC/Vmin: When battery SOC/voltage is lower than the set value, the grid supplies power to smart loads.
MotorLoadEn: Enable signal for motor loads.

AC Couple Mode Setting Instructions
Couple Fre Hz: AC coupling frequency.
Off Soc/Vol V %: AC coupling stops supplying power when battery SOC/voltage is higher than the set value
On Soc/Vol V %: AC coupling connects with the inverter to supply power when battery SOC/voltage is lower than the set value.
AC Couple Sell Ban: Prohibit power selling via AC coupling.

3.2.4 CT Ratio Settings



In the grid setting interface, CT Ratio is used to set the current transformer ratio.Fill in 100 for 100 A:50 mA CT, and 150 for 150 A:50 mA.This parameter is critical. Incorrect setting will cause abnormal device operation. Keep default value or contact us if you are unsure.

3.2.5 Operation Mode Settings

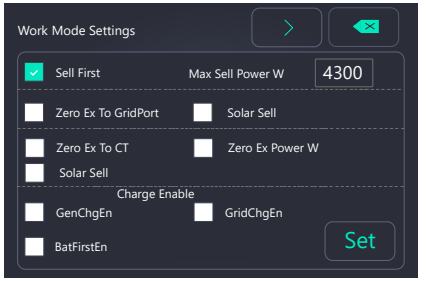

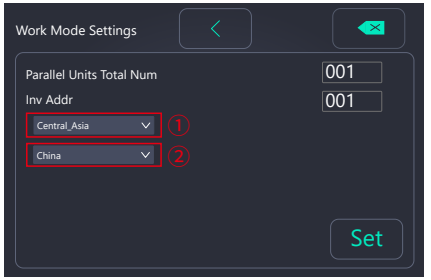

Click Professional Setting to select device operation mode, parallel quantity and parallel communication address. Refer to operation and maintenance manual for detailed operating logic.

Sell First: This mode allows the hybrid inverter to feed excess power from both PV and the battery into the grid. PV power is given priority for loads, and the remaining surplus is exported to the grid.

Zero EX To GridPort: In this mode, the hybrid inverter only supplies power to the connected local loads. The built-in current transformer ensures that the power flow to the grid side remains zero.

Solar Sell: This function can be enabled in either Zero EX To GridPort or Zero EX To CT mode. Once activated, surplus PV energy can be fed into the grid. During inverter operation, PV power is prioritized for local loads or battery charging, with any excess being exported to the grid.

Zero EX To CT: In this mode, the hybrid inverter supplies power not only to local loads connected to the load terminals, but also to household loads. An external current transformer (CT) is used to control the power flow to the grid side, maintaining it at zero.

One-click setup: ① choose the applicable region ②select the corresponding country.
The system will automatically load the full set of default parameters recommended by manufacturers in that country. Please wait for 1 minute after setting, so the parameters take effect.

3.2.6 System Settings

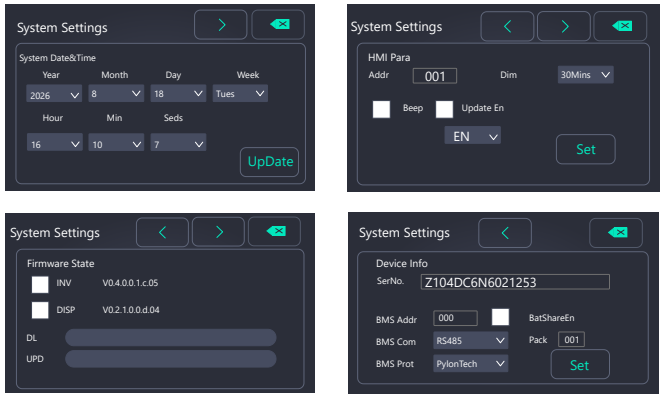

Click System Settings to configure system parameters.

SerNo.: Device serial number

BMS Addr: Battery communication address

BMS Com: Battery communication protocol, support CAN and RS485. For multiple batteries via RS485, set matched BMS address for each unit.

Pack: Number of battery packs

BMS Port: Battery brand

BatShareFn: Enable this when multiple inverters connect to the same battery bank

Update En Upgrade enable, check to support remote device upgrade

Firmware State: Firmware software version.

3.3 Event Display & Device Information

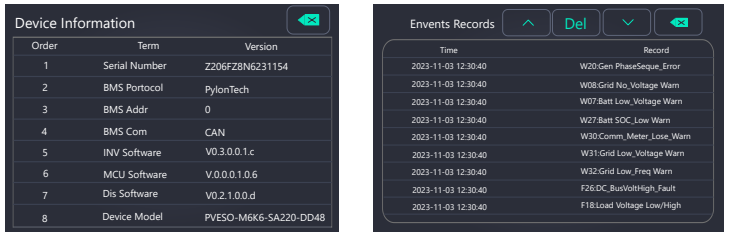

Click Device Info on the main interface to view the summary of device information. Click Event Records on the main interface to check all operating status and historical data of the device. In case of device faults,refer to these records and Table 4.2 in Chapter 4 for handling.

3.4 Setting Inverter Parameters via the App

This mobile App communicates with the inverter via 4G/Wi-Fi module. Common functions are as follows:

1.Check inverter operating data, firmware version, alarm information, etc.

2.Configure grid parameters, communication parameters and other inverter settings.

3.Perform equipment maintenance.

Scan the QR code below to access the App network configuration operation manual.

“Android”device provisioning

“ios”device provisioning

- **Professional personnel must commission and set up the device for first use. Improper settings will affect normal operation.**
- **Wear dedicated protective gear and use insulated tools during operation to avoid short circuit and electric shock hazards.**
- **Monitor operating status upon startup. Stop operation and cut off power immediately once any abnormality occurs, then contact professionals for maintenance. Do not restart until fully inspected and confirmed safe. Always turn off the battery switch before maintenance or servicing.**

Startup Protection Requirements



4.Operation and Maintenance

4.1 Commissioning

After the equipment and all connecting cables including batteries are correctly installed and securely connected, follow the steps below to power on the device. The definitions of LED flashing signals and LCD button functions are listed in Table 4.1.

Turn on the power switches of grid, battery and PV, then the LCD will light up.

Select meter or CT according to the actual current detection device and set its address; choose None if neither is used (configured in AC Setting1 on LCD).

Select applicable grid standard based on local power grid; choose universal standard if no matching option is available (configured in AC Setting1).

Set battery control mode on Battery Setting1 page as per actual battery type. The system can run normally without selecting Bat Mode when no battery is connected but PV or grid power is available.

Press the ON/OFF button to turn on the unit.

Refer to relevant single-unit operation mode instructions for specific mode configuration.

LED Definition		Explanation
DC	Green light steady on	PV work normal
AC	Green light steady on	Grid work normal
Normal	Green light steady on	Normal inverter operation
Alarm	Red light steady on	Fault or Warning
Esc	Exit setting	
UP	Go to previous option	
Down	Next option	
Enter	Confirm option	

Table 4.1 LCD Button Definition

4.2 Standalone Operation and Logic Description

In standalone operation mode, the K6 DIP switch on the external interface board inside the device should be set to ON (open), as shown in Figure 4.1.

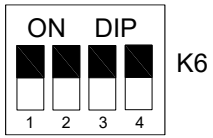

Figure 4.1 Schematic Diagram of DIP Terminal Set to ON

4.3 Parallel Operation and Logic Description

In parallel mode, set the K6 DIP switches on the external interface board of the first and last units as shown in Figure 4.1: K6 to ON. For example, in a five-unit grid-tied parallel system (Figure 4.4), set K6 ON for units 1# and 9#, but not for unit 3#,5#,7#.

4.3.1 Setting Path Description

On the main interface, tap “SETTING” to enter the settings menu, then tap the “Professional Setting” icon to access the operating mode settings interface, where parallel addresses can be configured.

4.3.2 Parallel Operation Logic

For multiple units in parallel, first connect them via the Parallel A and Parallel B ports to form a ring communication topology. After power-on, set the address parameters for each module in sequence .

The system automatically designates the hybrid inverter module with Inv Addr = 1 as the master, and all other modules with odd addresses as slaves.

All inverters run synchronously controlled by the master. Start all slaves first, then the master for normal identification and grid-connected power regulation.

The master will automatically isolate faulty or offline slaves and adjust power distribution. Recovered slaves can be automatically reconnected.

All operating modes of the parallel system are identical to those of a single unit. Note that the parallel system requires one external CT, installed on the mains feeder, with its sampling signal connected to the master’s CT input port.

4.3.3 Parallel System Wiring Diagram

Wiring diagrams are provided in Figure 4.2 (grid-tied parallel) and Figure 4.3 (off-grid parallel).

When Grid, Gen, or AC Couple is connected, the system runs in grid-tied mode; wiring must follow Figure 4.2.When neither grid nor generator is connected, the system runs in off-grid parallel mode; wiring must follow Figure 4.3.

During actual wiring, route the BMS communication cable, parallel communication cable, and BAT cable via their respective ports. Figures 4.2 and 4.3 illustrate connection positions only, not the actual cable routing.

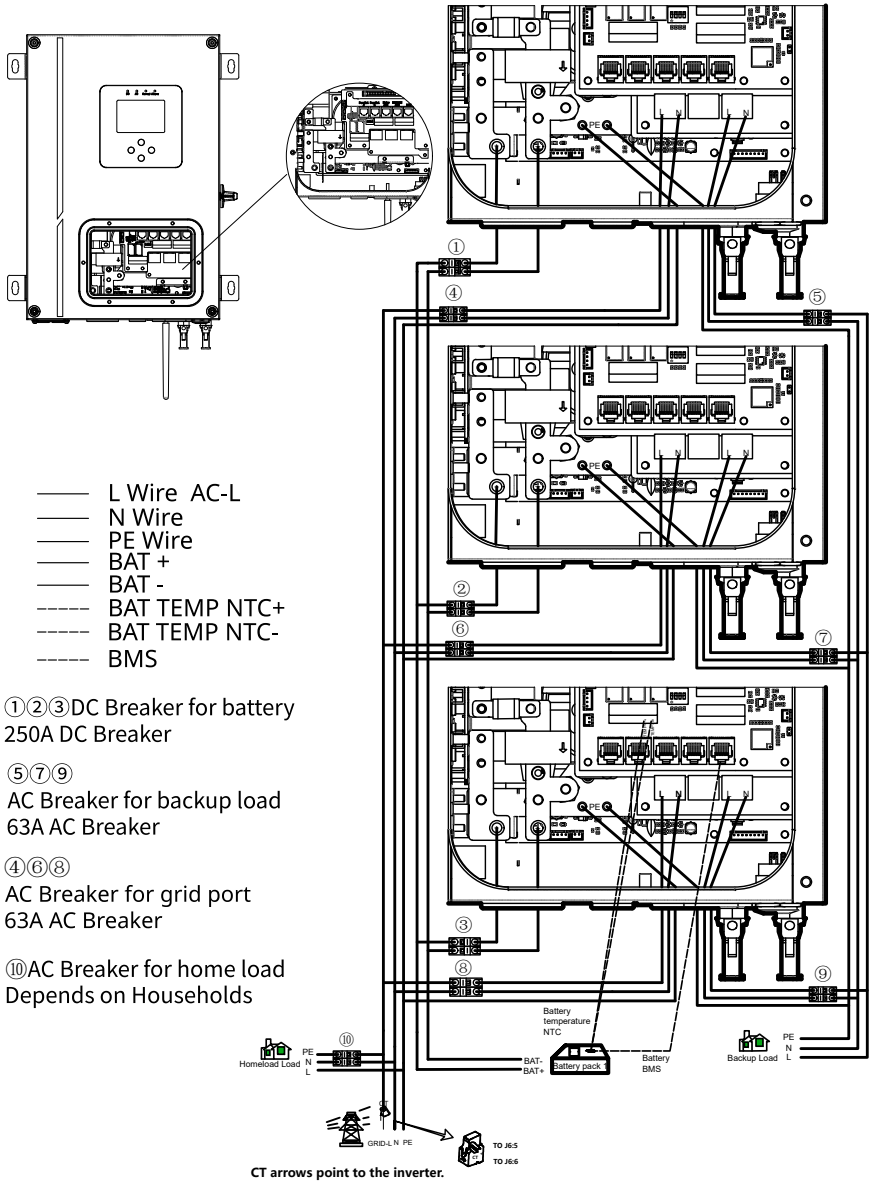

Figure 4.2 Grid-tied Parallel Wiring Diagram

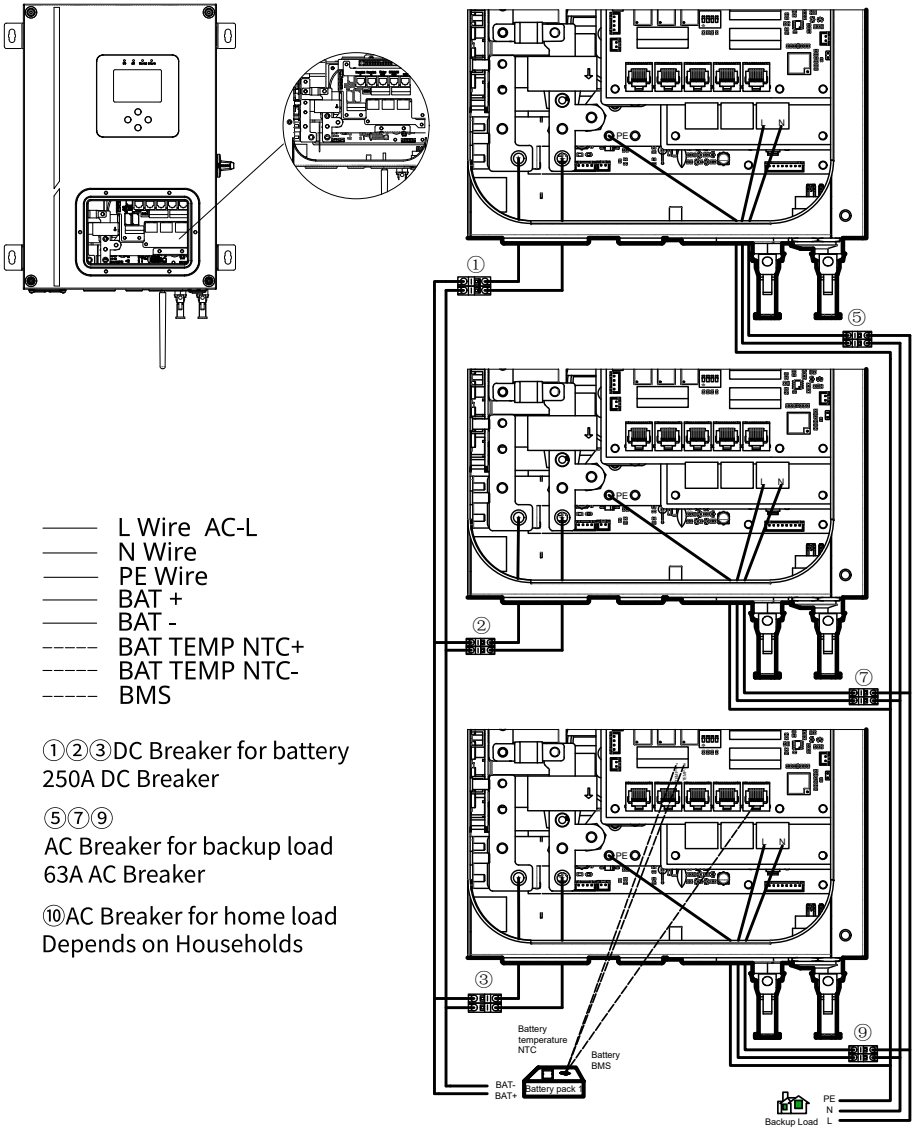

Figure 4.3 Off-grid Parallel Wiring Diagram

4.4 Example of 5 Units Parallel to Grid

4.4.1 Grid and Load Connection

See Figure 4.4 for the connection diagram of five inverters (No.1, 3, 5,7,9).K0 refers to the main grid circuit breaker; K11, K13, K15,K17,K19 are load circuit breakers; K1 is the main load circuit breaker, and K02 is the household load circuit breaker. Each inverter is equipped with its own grid circuit breaker: K01, K03, K05,K07,K09 respectively.

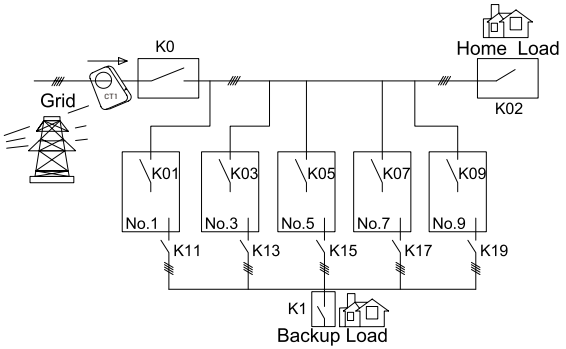

Figure 4.4 Connection Diagram of Five Inverters

4.4.2 Parallel Communication Connection & Cable Check

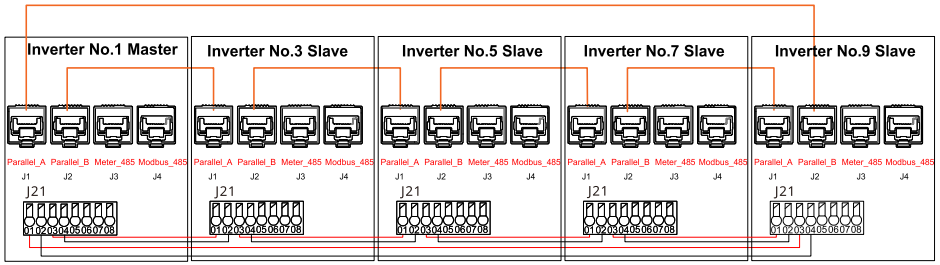

Figure 4.5 Parallel Communication Connection Diagram

Step 1:

a) Check whether the cable connection is correct as shown in Figure 4.4 (for BMS connection, CT or ammeter connection, battery connection, and ground cable connection, refer to the previous chapter.) Check whether the positive and negative batteries are consistent.

b) Please check whether the parallel cable connection is correct as shown in Figure 4.5.

c) Set the K6 DIP switch in the middle of the first and last inverters to ON, and turn off the others.

Step 2:

a) Close main grid circuit breaker K0.

b) Check the voltage difference between the same phase at the AC input terminals of each inverter and the outgoing side of the main circuit breaker K0, one by one, and confirm that all measured values are close to zero. If any abnormal voltage is detected at ports K01, K03, K05,K07,K09 inspect the wiring between the grid and the inverter grid breakers. Proceed to Step 3 only after all connections are verified to be correct.

Step 3:

a) Close circuit breakers K01, K03, K05,K07and K09, ensuring that the battery is not connected to the inverters and that the load-side circuit breakers (K11, K13,K15,K17, K19) remain open.

b) Check if the LCD screen lights up and verify normal grid voltage and frequency on the grid data page.

c) Assign device addresses as described in Section 4.1.1. Set the master address to 1, and the slave addresses to 3, 5 ,7 and 9 respectively.

d) For shared battery packs, enable BatShareEn in system settings and configure BMS communication mode and address.

e) Select the metering mode in AC Settings1; choose None if no CT or power meter is used.

f) Select the battery control mode under “Battery Setting1” according to the actual battery type: SOC control, voltage control, or lithium-battery-specific control mode. If the battery is not yet connected, this step may be skipped temporarily.

g) Close the DC side fuse-switches of all inverters in the following order: first close the slaves (3# and 5#), and then close the master (1#) last.

h) Wait until the grid voltage stabilises, then check the load page on the main screen to confirm that the output voltage is normal.

i)Measure the voltage difference of the same phase between the grid input terminals and the load output terminals of each inverter, one by one, and confirm that all values are close to zero.

j) Measure the voltage difference of the same phase between the load output terminals of each inverter and the incoming terminals of their corresponding load circuit breakers (K11, K13, K15,K17,K19). Verify that all values are close to zero. If any deviation is excessive, inspect the wiring between the inverter load output port and the corresponding load circuit breaker.

k) Proceed to Step 4 if all checks pass.

Step 4:

a) Close one of the load circuit breakers, for example K11.

b) Check the in-phase voltage difference between input and output terminals of K13,K15,K17 and K19, make sure all values are close to zero.

c) If the voltage difference is not within tolerance, check the wiring between the corresponding load circuit breaker and the main load circuit breaker K1.

d) Close all load circuit breakers when all voltage differences are normal.

e) Once all load circuit breakers are closed, the connection check is complete. After verification, open all load circuit breakers in sequence, press the emergency stop button (as shown in the figure), and open all grid circuit breakers.

4.4.3 Grid-connected Startup

a) Ensure all wiring is fully inspected before grid-connected startup.

b) Close main grid breaker K0 and each internal inverter grid breaker K01, K03, K05,K07,K09.

c) Confirm normal grid voltage and frequency on each inverter.

d) Close all battery breakers and check battery voltage. Verify correct SOC display for lithium battery SOC control mode.

e) Switch on all load circuit breakers K11, K13, K15,K17,K19.

f) Press the lower round start buttons on all slave inverter units.

g) Press the lower round start button on the master inverter unit.

h) After grid relay pulls in, check normal load voltage. Tap the inverter icon to confirm INV Stage shows 30-Working.

i) Close the main load breaker to complete startup.

4.4.4 Off-grid Startup

a) Make sure all wiring is checked correctly before off-grid startup.

b) Close all battery breakers and check battery voltage of each inverter. Confirm correct SOC value beside the battery icon for lithium battery SOC control mode.

c) Close all load circuit breakers (K11, K13, K15,K17,K19).

d) Press the lower round start buttons on all slave inverter units.

e) Press the lower round start button on the master inverter unit.

f) After the grid relay closes, check whether the load voltage on the main interface is normal. Tap the inverter icon to confirm INV Stage displays 10-Working.

g) Close the main load circuit breaker to supply power, and the operation is completed.

4.4.5 Shutdown

a) Disconnect main load circuit breaker K1.

b) Turn off all load circuit breakers (K11, K13, K15,K17,K19) Release the round side button of the master inverter.

c) Release the lower round button of the master inverter.

d) Release the lower round buttons of all slave inverters.

e) Disconnect main grid breaker K0 and all battery breakers.

f) The system stops running.

4.5 Fault Alarm and Handling

If the device fails to start, tap the Events icon on the main interface to view historical alarm records and troubleshoot item by item according to abnormal logs. After identifying the root cause through the above analysis, formulate a suitable handling plan according to the on-site conditions. For specific alarm messages and their corresponding corrective actions, refer to Table 4.2.

- Periodically inspect all connections of the inverter to ensure they are secure and free from looseness, with particular attention to critical components such as fans, power modules, input terminals, output terminals, and grounding connections.
- In the event of an alarm-triggered shutdown, never restart the equipment immediately. The cause of the fault must be identified and rectified before restarting; the inspection and repair process shall strictly follow the procedures specified in the inverter maintenance manual.
- Operators must be properly trained and possess the ability to diagnose common faults and perform basic troubleshooting, such as proficiently replacing fuses, components, and damaged circuit boards. Personnel without adequate training or qualification are not permitted to operate the equipment.
- For faults that are difficult to resolve or when the cause is unknown, a detailed record of the site conditions shall be kept, and the inverter manufacturer shall be contacted promptly for technical support.

NO.	Warning	Handling Suggestions
W01	Reserved	Reserved
W02	Comm_LCD_Lose_Warning	1. Please Check the communication line between the LCD and the control board. 2. Seek help from us, if you cannot return to normal.
W03	Reserved	Reserved
W04	Fan_Faullt_Warning	1. Please check the fan outside the enclosure for foreign objects. 2. Restart the equipment, please contact us if you still fail.
W05	PV1 low voltage warning	1. Please check the PV1 voltage range in the equipment system settings. The PV voltage setting value is between (150 ~ 500) V; 2. At present, the light is weak, and the actual photovoltaic power is low; 3.Please contact us or PV supplier again.
W06	PV2 low voltage warning	1. Please check the PV2 voltage range in the equipment system settings. The PV voltage setting value is between (150 ~ 500) V; 2.Please contact us or PV supplier again.
W07	Batt Low_Voltage Warning	1. Please check whether the battery voltage is too low; 2. Check whether the battery voltage lower limit on the battery setting page is higher than the actual battery. The minimum battery voltage setting value is between (10 ~ 55) V; 3. Check whether the maximum discharge current on the battery page exceeds the maximum battery operating current; 4.Please contact us or battery suppliers if you are alert again.

W08	Grid No_Voltage Warning	1. Please check whether the grid voltage is too low; 2.Check whether the lower limit of AC voltage is too high on the AC setting page. The minimum grid voltage setting value is between (198 ~ 220) V. 3.Please contact us if you are alert again.
W09	Gen No_Voltage Warning	1. Please check whether the gen voltage is too low; 2.Check whether the lower limit of Gen voltage is too high on the AC setting page. The minimum gen voltage setting value is between (198 ~ 220) V. 3.Please contact us if you are alert again.
W10	Reserved	Reserved
W11	AC_PLL_Warning	Failed to detect the output phase lock after power-on 1.Please check the AC wiring of the equipment and restart after errors; 2.If the restart failed and reported the error again, please contact us.
W12	Reserved	Reserved
W13	Reserved	Reserved
W14	Reserved	Reserved
W15	Comm_BMS_Lose_Warning	1.Please check whether the BMS communication cable is well connected. 2.If you still alert, please contact us.
W16	Grid High_Voltage Warning	1.The output voltage is not within the equipment setting range, and it may be caused by the device stop. 2.If you still alert, please contact us.
W17	Grid PhaseSeque_Error	1.Check the device wiring and the equipment of each power supply normally. Restart the device. 2.If you still alert, please contact suppliers.
W18	Grid High_Freq Warning	1.Please check the grid frequency range value in the equipment system. 2.Please check whether the grid wiring is correct. 3. If you still alert, please contact us.
W19	Gen Voltage Warning	1.The output voltage is not within the equipment setting range, and it may be caused by the device stop. 2.If you still alert, please contact us.
W20	Gen PhaseSeque_Error	1.Please check whether the gen wiring is correct. 2.Restart the equipment, please contact suppliers if you still fail.
W21	Gen_Freq_Warning	1.Please check the gen frequency range value in the equipment system. 2.Please check whether the gen wiring is correct. 3.If you still alert, please contact us.

W22	Reserved	Reserved
W23	Load low voltage warning	1.Please check whether the load line wiring is correct. 2.Please check the range of AC voltage. 3.Restart the equipment, please contact us if you still fail.
W24	PV2 High_Voltage warning	1.Please check the PV2 voltage range in the equipment system settings. The PV voltage setting value is between (150 ~ 500) V. 2.Please contact us or PV supplier again.
W25	PV1 High_Voltage warning	1.Please check the PV1 voltage range in the equipment system settings. The PV voltage setting value is between (150 ~500) V. 2.Please contact us or PV supplier again.
W26	Batt High_Voltage Warning	1.Please check whether the battery voltage is too high. 2.Please check whether the upper limit of the battery voltage range in the equipment system is too low. The highest battery voltage setting value is between (15 ~ 60) V. 3.Please contact us or battery suppliers if you are alert again.
W27	Batt SOC_Low Warning	1.Please check whether the positive and negative batteries are reversed. 2.If you still alert, please contact us.
W30	Comm_Meter_Lose_Warning	1.Please check that the ground wire is connected correctly. 2.Seek help from us, if you cannot return to normal.
W31	Grid Low_Voltage Warning	Restart the equipment, please contact us if you still fail.
W32	Grid Low_Freq Warning	Restart the equipment, please contact us if you still fail.
F01	Batt Inversed Failure	1.Please check whether the positive and negative batteries are reversed. 2.If you still alert, please contact us.
F02	Insulation_Failure	1.Please check that the ground wire is connected correctly. 2.Seek help from us, if you cannot return to normal.
F03	Reserved	Reserved
F04	Reserved	Reserved
F05	Reserved	Reserved
F06	Tz_Dc_OverCurr_Fault	1.Please check the battery current limit value in the equipment system. 2.Please check whether the PV and battery wiring of the equipment are normal. 3.Cut off all power source and wait for 2 minutes to discharge the inverter. Open all power circuit breakers and restart the device. 4.If the restart failed and alarmed again, please contact us.

F07	DC_OverCurr_Failure	1. Please check the battery current limit value in the equipment system 2. Please check whether the PV and battery wiring of the equipment are normal. 3. Cut off all power source and wait for 5 minutes to discharge the inverter. Open all power circuit breakers and restart the device. 4. If the restart failed and alarmed again, please contact us.
F08	Reserved	Reserved
F09	IGBT_Failure	Restart the equipment, please contact us if you still fail.
F10	Reserved	Reserved
F11	Reserved	Reserved
F12	Reserved	Reserved
F13	Tz_Ac_OverCurr_Fault	1.Please check whether the backup load power is within the range. 2.Restart and check whether it is normal. 3.Seek help from us, if you cannot return to normal.
F14	AC_OverCurr_Failure	1.Please check whether the backup load power is within the range. 2.Restart and check whether it is normal. 3.Seek help from us, if you cannot return to normal.
F15	GFCI_Failure	1.Please check the wiring of the equipment and restart after errors. 2.If the restart failed and reported the error again, please contact us.
F16	Reserved	Reserved
F17	Reserved	Reserved
F18	Load Voltage Low/High	1.Please check whether the load line wiring is correct. 2.Please check the range of AC voltage. 3.Restart the equipment, please contact us if you still fail.
F19	Reserved	Reserved
F20	Reserved	Reserved
F21	Reserved	Reserved
F22	Reserved	Reserved
F23	DC_BusVoltLow_Fault	Restart the equipment, please contact us if you still fail
F24	Reserved	Reserved
F25	Reserved	Reserved
F26	DC_BusVoltHigh_Fault	Restart the equipment, please contact us if you still fail.
F27	BUS_Voltage_Fault	Restart the equipment, please contact us if you still fail.
F28	AC_BackFeed_Fault	Restart the equipment, please contact us if you still fail.

F29	Heatsink_HiTemp_Fault	Over high temperature alarm
F30	Reserved	Reserved
F31	PV1 Inversed Failure	1.Please check PV1 terminal is correct. 2.If you still alert, please contact us.
F32	PV2 Inversed Failure	1.Please check PV2 terminal is correct. 2.If you still alert, please contact us.

Table 4.2 Equipment Alarm Information and Solutions

4.6 Daily Maintenance Recommendations



- **All maintenance operations must be carried out after disconnecting all switches on the DC side, AC side of the energy storage controller, battery packs and AC power distribution cabinet.**
- **After turning off the AC and DC switches of the energy storage inverter, residual voltage still remains on some internal components. Wait for at least 5 minutes before performing maintenance to avoid electric shock hazards.**

4.6.1 Daily Inspection

- Check inverter breakers for overheating during peak load, temperature shall not exceed 90℃.
- Check ambient temperature, ventilate for cooling if overheated.
- Compare voltage, current and power data of inverter and box transformer during daily peak load.
- Check inverter operating sound daily.
- Check daily fault logs for new errors.

4.6.2 Monthly Inspection

- Regularly check all wiring connections monthly for looseness. Focus on fans, power modules and terminal blocks for burnout and overheating.
- Start and stop inverter strictly per official manual.
- Operators shall receive professional training and operate in compliance with regulations.

4.6.3 Quarterly Inspection

- Tighten the screws on the AC and DC sides of the inverter every six months.
- Dust the inverter once every three months.
- Open inverter room vents for ventilation in hot weather.

5. Product Transportation and Storage

5.1 Product Transportation Requirements

5.1.1 Logistics Transportation

- The Company's inverters are shipped via designated professional logistics service providers. The logistics company will contact the dealer to confirm receipt details prior to dispatch. It is recommended that the delivery point address and contact information be verified in advance, and that the transport route be properly planned.
- Drivers must follow professional standards—no alcohol, drugs, or calls while driving. The driver will stop before arrival to confirm delivery. Coordinate in advance to avoid distractions.
- Drivers must follow professional standards—no alcohol, drugs, or calls while driving. The driver will stop before arrival to confirm delivery. Coordinate in advance to avoid distractions.

5.1.2 Unloading & Handling

- Forklift operators must hold a valid special equipment operation certificate. The certificate shall be strictly verified before operation. Uncertified operation is strictly prohibited.
- Handling personnel must wear appropriate personal protective equipment (PPE) as required.
- At delivery points without forklift unloading facilities, the pallets may be removed directly on the logistics vehicle, and each unit shall be unloaded one at a time.

5.2 Product Storage Environment Requirements

Store inverters as required if not put into immediate use.

- Pack inverters in original packages with desiccants and seal tightly with tape.
- Storage temperature: -40°C~+70°C; Relative humidity: 5%~95%RH.
- Store in clean and dry place to avoid dust and moisture erosion.
- Max stacking height: 4 layers for inverters with outer package size 600*420*280 (W×H×D). Place carefully to prevent tipping, injury or damage. Store upright, inversion forbidden.
- Inspect periodically and power on every six months during storage. Replace packaging if damaged by pests.
- Long-stored inverters must be inspected and tested by professionals before use.

6. Legal Statement

In addition to the above warranty terms, relevant national and local laws and regulations stipulate compensation liabilities concerning product power connection, including breaches of implied terms and warranty commitments. The company hereby declares that within the scope permitted by law, relevant terms and policies may only limit liabilities instead of being fully exempted from liabilities.

7. Appendix Documents

Appendix 1: Port Definition

MARK	J6-1	J6-2	J6-3	J6-4	J6-5	J6-6	J6-7	J6-8
Definition	NO2	COM2	NO1	COM1	CT1+	CT1-	BAT-TEMP	ISOGND2
Function	Gen adjustment control		Gen start control		External A-phase CT1 sampling input		Battery temperature sampling input	
MARK	J7-1	J7-2	J7-3	J7-4	J7-5	J7-6	J7-7	J7-8
Definition	IN1+	IN1-	IN2+	IN2-	IN3+	IN3-	RSD+	RSD-
Function	Reserve for spare						+12Voutput	12VGND
MARK	J14-1	J14-2	J14-3	J14-4	J14-5	J14-6	J14-7	J14-8
Definition	CANL2	CANH2	CANL2	CANH2	RS485A1	RS485B1	PV C	PV C
Function	Parallel CAN communication				Meter communication		PV control	
Rj45-	1	2	3	4	5	6	7	8
BMS	RS485B3	RS485A3	NC	CANH2	CANL2	NC	RS485A3	RS485B3
Function	BMS-485 communication			BMS-485 communication			BMS-485 communication	
Parallel_A	CANH1	CANL1	SNY-01	SNY-02	ISOGND1	ISOGND1	CAN-SMH	CAN-SML
Function	Parallel synchronous communication							
Parallel_B	CANH1	CANL1	SNY-01	SNY-02	ISOGND1	ISOGND1	CAN-SMH	CAN-SML
Function	Parallel synchronous communication							
Meter_485	RS485B1	RS485A1	NC	NC	NC	NC	RS485A1	RS485B1
Function	Meter communication						Meter communication	
MODBUS	RS485B4	RS485A4	NC	RS485B2	RS485A2	NC	RS485A4	RS485B4
Function	EMS monitoring			Reserve background monitoring communications			EMS monitoring	

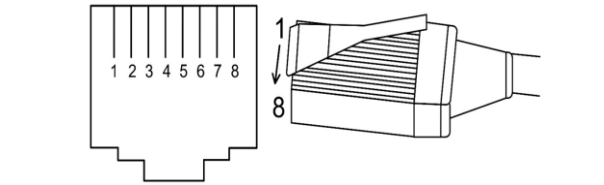

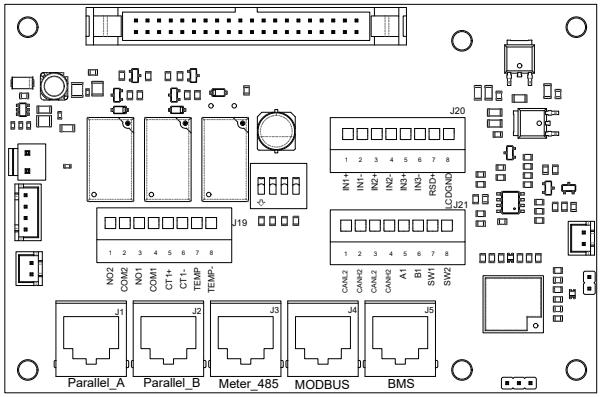

Appendix 2: CT Specifications

CTSA016 100 A:50 mA

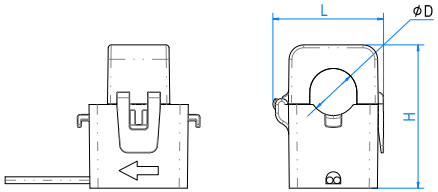

ΦD-L-W-H(mm)
16. 0/37. 8/33. 9/49

Appendix 3: Inverter Parameters

Item	Eris-5G1-LE	Eris-6G1-LE	Eris-6.6G1-LE
Battery Input Data			
Battery Type	Lead-acid or Li-ion		
Battery Voltage Range	40 V~60 V		
Max.Charge Current	110 A	135 A	150 A
Max.Discharge Current(A)	110 A	135 A	150 A
Charging Profile	3 Stages/Equalization		
External Temperature Sensor	Optional		
Charging Strategy for Li-ion battery	Self-adaptive to BMS		
PV String Input Data			
Max.PV Input Power	8000 W	9600 W	10560 W
Max.PV Input Voltage	500 V		
Nominal DC Input Voltage	370 V		
MPPT Voltage Range	60 V~425 V		
Start-up Voltage	75 V		
Max.PV Input Current	20 A+20 A		
Max.PV Isc	30 A+30 A		
No.of MPPT Tracker	2		
Max. PV Strings per MPPT Tracker	1+1		
Output AC(Grid Side)			
Rated/Max. Output Power	5000 W	6000 W	6600 W
Max. Output Apparent Power	5500 VA	6600 VA	7260 VA
Nominal Output Frequency and Voltage	50/60 Hz, 1/N/PE 220 V a.c. 50/60 Hz, 1/N/PE 230 V a.c.		
Rated Output Current	22.7/21.7 A	27.3/26.1 A	30.0/28.7 A
Max. Output Current	25.0 A	30.0 A	33.0 A
THDi	<3 %		
Input AC (Grid Side)			
Rated Input Power	5000 W	6000 W	6600 W
Nominal Input Frequency and Voltage	50/60 Hz, 1/N/PE 220 V a.c. 50/60 Hz, 1/N/PE 230 V a.c.		
Grid Type	Single phase		
Rated Input Current	22.7/21.7 A	27.3/26.1 A	30.0/28. 7

Max. Continuous AC Pass-through	40 A		
Input AC (Generator)			
Rated Input Power	5000 W	6000 W	6600 W
Nominal Input Frequency and Voltage	50/60 Hz, 1/N/PE 220 V a.c. 50/60 Hz, 1/N/PE 230 V a.c.		
Generator Type	Single phase		
Rated Input Current	22.7/21.7 A	27.3/26.1 A	30.0/28. 7
Max. Continuous AC Pass-through	40 A		
Output AC(Back-up)			
Rated/Max. Output Power	5000 W	6000 W	6600 W
Max. Output Apparent Power	5500 VA	6600 VA	7260 VA
Nominal Output Frequency and Voltage	50/60 Hz, 1/N/PE 220 V a.c. 50/60 Hz, 1/N/PE 230 V a.c.		
Rated Output Current	22.7/21.7 A	27.3/26.1 A	30.0/28.7 A
Max. Output Current	25.0 A	30.0 A	33.0 A
Peak Power (off-grid)	10000 W , 10 S	12000 W , 10 S	13200 W , 10 S
THDv (@linear load)	<2 %		
Off-Grid to Grid-Tied Transfer Time	<2 ms		
Grid-Tied to Off-Grid Transfer Time	<5 ms		
Efficiency			
Max.Efficiency	97.60 %		
Euro Efficiency	96.50 %		
MPPT Efficiency	99.00 %		
Protection			
PV Input Lightning Protection	Integrated		
Anti-islanding Protection	Integrated		
PV String Input Reverse Polarity Protection	Integrated		
Insulation Resistor Detection	Integrated		
Residual Current Monitoring Unit	Integrated		
Output Over Current Protection	Integrated		
Output Shorted Protection	Integrated		
Overvoltage Category	III (AC side), II (DC side)		

Certification and Standards	
EMC/Safety Regulation	IEC/EN 62109-1 IEC/EN 62109-2,IEC/EN 61000-6-1,IEC/EN 61000-6-3
Interface	
LCD/LED Display	LCD
Communication with BMS	CAN, RS485
General Data	
Operating Temperature Range	-20℃~+60℃, ＞45℃ Derating
Cooling	Smart cooling
Noise	≤40 dB(A)
Weight	19 kg
Size(W x H x D)	365 mm × 496 mm × 169 mm
Ingress Protection	IP65
Mounting Type	Wall-mounted
Warranty	5 years
Max. Operation Altitude	2000 m
Operating Relative Humidity	5 % ~ 95 % RH, Non-Condensing