User Manual

Battery Pack-Trit5-W Pro

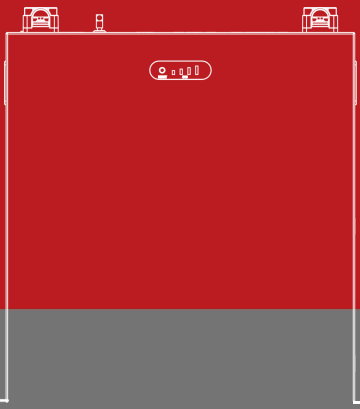

CHISAGE ESS

www.chisagess.com

Change History

Version 1.0 (2026.02.24)：
First released.

Version 1.1 (2026.05.08)：
Add floor mounting bracket.

Content

Change History 1
Cautions 1
Declaration 1
Abbreviation 2
Definition 2
1. General Introduction 4
1.1 Scope and Purpose 4
1.2 Brief Introduction 4
1.3 Product Properties 4
1.4 Nameplate 5
2. Technical Specification 6
2.1 Battery Specification 6
3. Product Overview 7
3.1 Dimension 7
3.2 Interface Definition 8
3.3 State LED Indicate 10
3.4 Capacity LED Indicate 10
3.5 LED Flash Mode 11
4. Installation and Configuration 12
4.1 Preparations for installation 12
4.2 Installation 14
5. Transportation and Storage 18
5.1 Transportation 18
5.2 Storage 18
6. Operation and Maintenance 19
6.1 Accident Handling 19
6.2 Maintenance 20

Cautions

Customers must abide by the operating specifications, and any installation, maintenance, and use of this product must strictly abide by the relevant safety regulations:

- *It is forbidden to store or use at high temperatures, and it must be kept from heat sources. These environments above the safe temperature range will significantly decrease this product's performance and life and even cause serious consequences such as burning and explosion.*
- *It is forbidden to store and use in an environment with high static electricity or electromagnetic radiation. Otherwise, the electronic components in this product will be damaged, which may cause safety hazards.*
- *Do not get wet or even immerse in water. Otherwise, it may cause an internal short circuit, function loss, or abnormal chemical reaction of the product and cause fire, smoke, explosion, etc.*
- *Suppose you find smoke, heat, discoloration or deformation, or any abnormal phenomenon during use, storage, transportation, and service. In that case, you should immediately contact the professional department to observe further and control the risk.*
- *Do not dispose of discarded products in fires or hot stoves. Waste batteries should be recovered and recycled by professional institutions or organizations.*
- *Professional technicians must operate the installation and maintenance of the battery system, and the user must strictly abide by the relevant safety regulations. It is strictly forbidden for non-professionals to install or repair the battery system and abuse it beyond the range.*

Declaration

Before you use this product, make sure you have read and fully accept the following information:

- *Zhejiang Chisage New Energy Technology Co., Ltd. will not be liable for the loss of personnel and property caused by the violation of the product specifications, conditions of use, scope of work, precautions and other provisions in this document.*
- *There are potential risks and hazards in the process of installation, storage, transportation, use, maintenance and repair of this product. Please perform operations according to the corresponding requirements.*
- *In the use, service and maintenance of products, users should establish correct rules, Zhejiang Chisage New Energy Technology Co., Ltd. will give necessary technical support.*
- *Zhejiang Chisage New Energy Technology Co., Ltd. reserves the right of final interpretation of all problems of this product. If you have any question or objection to the product, please contact the professional department of Zhejiang Chisage New Energy*

Technology Co., Ltd..

- *During the storage process, the storage temperature and humidity do not exceed the above requirements and must be protected from rain.*
- *It is strictly prohibited to disassemble the battery pack without permission from our company. We are not responsible for any problems arising from unauthorized disassembly.*

Abbreviation

BMS	*Battery Management System*
BOL	*Begin of Life*
CAN	*Controller Area Network*
EOL	*End of Life*
HV	*High Voltage*
LV	*Low Voltage*
OCV	*Open Circuit Voltage*
SOC	*State of Charge*

Definition

Battery Cell	*The minimum energy storage unit, a basic electrochemical energy storage device, consists of a positive electrode, a negative electrode, an electrolyte, a separator, and a casing, also known as a battery cell.*
Battery Module (Battery Pack)	*A power supply system composed of several battery modules, circuit equipment (protection circuit, cell management system, electrical and communication interfaces), thermal management devices, etc., is used to provide energy for electrical devices.*
Nominal Voltage	*Indicates or identifies the appropriate voltage approximation for the cell or pack.*
Capacity	*The amount of electricity that can be provided by a battery cell that is fully charged under specified conditions. Usually expressed in Ah.*
Energy Capacity	*The energy can be provided by a fully charged battery cell or pack under specified conditions. Usually expressed in Wh or kWh.*

Nominal Capacity	*At the beginning of life (BOL), the minimum capacity that a fully charged cell can be provided under specified conditions is when it is discharged at a rate of 1C (C-rate).*
Unit	*"V" (Volt): Electrical Voltage unit;* *"A" (Ampere): Electrical current unit;* *"Ah" (Ampere-Hour): Electrical charge unit;* *"Wh" (Watt-Hour): Electrical energy unit;* *"Ω" (Ohm): Resistance unit;* *"°C" (Celsius degree): Temperature unit;* *"mm"(millimeter): Length unit;* *"s" (second): Time unit;* *"kg" (kilogram): Weight unit;* *"Hz" (Hertz): Frequency unit.*

1. General Introduction

1.1 Scope and Purpose

This user manual applies to the Trit5-W Pro rechargeable lithium-ion battery designed by Zhejiang Chisage New Energy Technology Co., Ltd.

The user manual aims to introduce the Trit5-W Pro product information and installation, operation, and maintenance guidelines. Include the battery pack and BMS specification, internal and external structure, LED indication, battery set, battery system diagram, and other cautions. The manual cannot include complete information about the BESS system.

Zhejiang Chisage New Energy Technology Co., Ltd. reserves the right to final interpretation of this manual.

1.2 Brief Introduction

Trit5-W Pro is designed according to market requirements to meet the client's wall mounted application requirement. In operation with the hybrid or off-grid inverter, you can charge the battery when PV or grid is available and discharge the battery when you need the backup power supply.

The batteries can be connected in parallel to build a higher-capacity system to satisfy the long-time energy storage demand.

1.3 Product Properties

The Trit5-W Pro uses lithium iron phosphate (LiFePO4) battery cells, and battery cells are managed effectively by BMS with better performance, the systems features as below:

- *The cathode material is lithium iron phosphate (LiFePO4), safer with a longer life span.*
- *Flexible configurations allow parallel multi-battery for longer standby time.*
- *Self-ventilation with lower system noise.*
- *With a wide range of temperatures for the working environment, 0°C~+55°C, circulation span, and discharging performance are well under high temperatures.*
- *Carries battery management system with better performance and possesses protection functions like over-discharge, over-charge, over-current, and abnormal temperature.*
- *Self-management on charging and discharging, single core balancing function.*
- *Support the most mainstream CAN and RS485 protocol.*

1.4 Nameplate

Model: Trit5-W Pro	CHISAGE ESS
Description:	Battery Pack
Total Energy:	5.12kWh
Nominal Capacity:	100Ah
Voltage Range:	44.8~57.6Vdc
Nominal Voltage:	51.2Vdc
Constant Current:	100A
Operation Temperature:	-20°C~55°C
Ingress Protection:	IP20
Weight:	45±5kg
Dimension:	W448xH483xD140mm

Company: Zhejiang Chisage New Energy Technology Co., Ltd.
Address: No.1828 Fuqing South RD., Panhuo ST.,Yinzhou, Ningbo, Zhejiang, 315100 China.
Tel: +86 150 5749 1826 Email: info@chisagess.com
Website: www.chisagess.com

SN:



Fig. 1-1 Trit5-W Pro nameplate

2. Technical Specification

2.1 Battery Specification

No.	Item	Specification	Remark
1	Battery Cell Model	LFP100Ah	Lithium Iron Phosphate
2	Battery Module	16S-100Ah	
3	Nominal Capacity	100Ah	
4	Nominal Voltage	51.2V	Single cell: 3.2V
5	Operation Voltage Range	44.8V~57.6V	
6	Nominal Energy	5.12kWh	
7	Operation Temperature	Charge Temperature: 0°C~55°C; Discharge Temperature: -20°C~55°C.	
8	Storage Temperature	-10°C~35°C	25°C is necessary for more than three-month of storage
9	Working Humidity	20~85%RH	
10	Standard Charge Current	50A	
11	Maximum Continuous Charge Current	100A	
12	Standard Discharge Current	50A	
13	Maximum Continuous Discharge Current	100A	
14	PACK Weight	About 45±5Kg	
15	Dimension	Width: 448 (±2) mm Height: 483 (±2) mm Depth: 140 (±2) mm	

3. Product Overview

3.1 Dimension

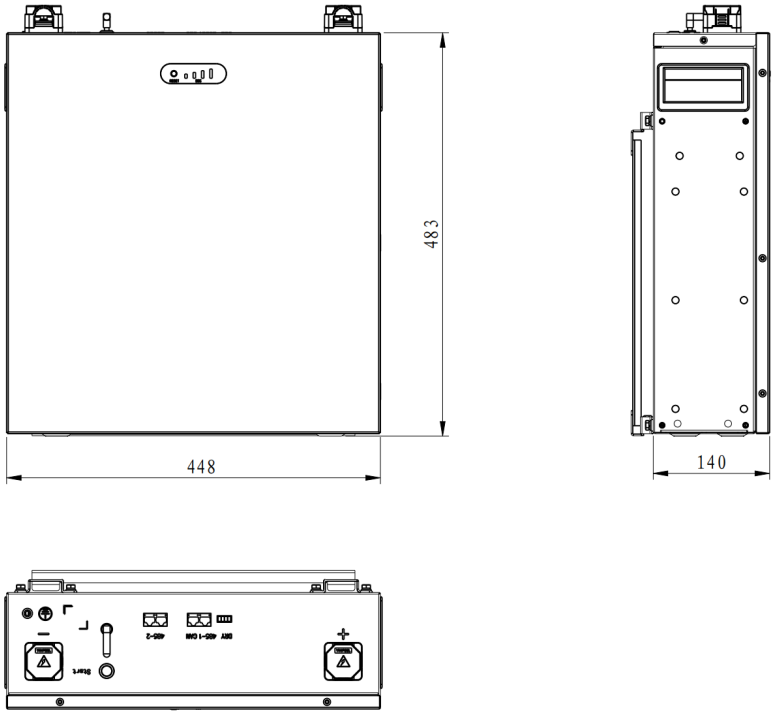

Fig. 3-1 Trit5-W Pro PACK dimension drawing

3.2 Interface Definition

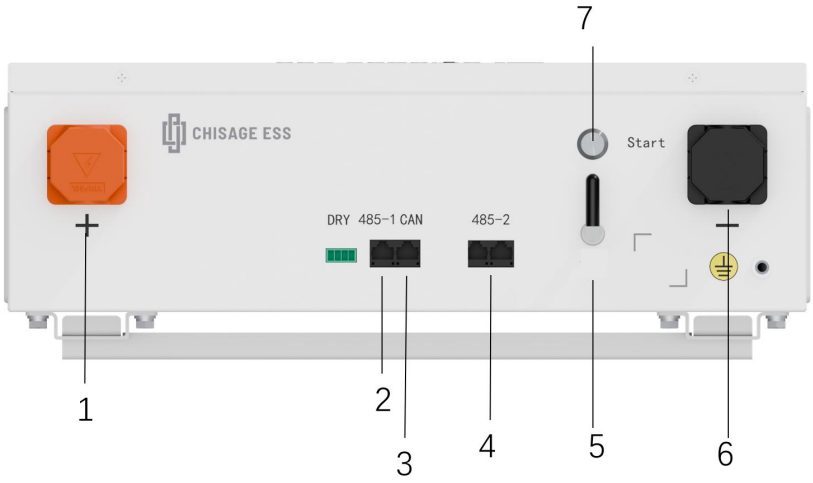

Fig. 3-2 Trit5-W Pro PACK interface

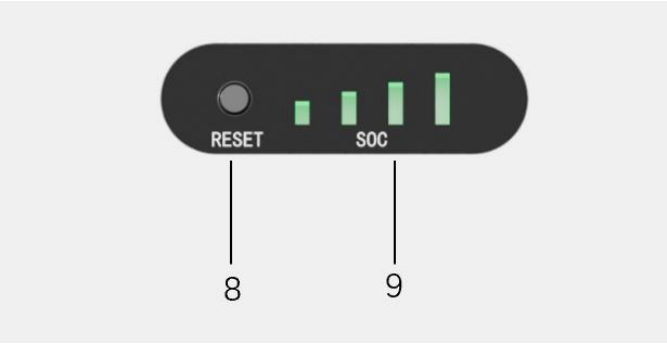

Fig. 3-3 Trit5-W Pro PACK Interface

No.	Interface	Connector	Description	Remark
1	Battery power +	150A	Positive Pole	
2	Host computer communication port & Inverter communication port	RJ45	RS485: PIN 1,8: 485B PIN 2,7:485A PIN 3,6:GND	/
3	Inverter communication port	RJ45	CAN: PIN 4: CANH PIN 5: CANL PIN 3,6:GND	/
4	Parallel port	RJ45	PIN 1,8: 485B PIN 2,7:485A PIN 4: CAN H, PIN 5: CAN L PIN 3,6:GND	Left: Parallel out Right: Parallel in
5	WiFi antenna	/	/	Receiving and sending WiFi signals
6	Battery power -	150A	Negative Pole	
7	Power switch	/	OFF/ON	
8	Reset button	/	After the battery reaches the limit protection, it needs to be restarted by the Reset button	
9	SOC	/	The number of green lights shows the remaining power.	

3.3 State LED Indicate

System state	Running state	LED4	LED3	LED2	LED1	remark
Battery off	*Sleep*	*OFF*	*OFF*	*OFF*	*OFF*	*All OFF*
Battery standby	*Normal*	*According to the battery level display*				*Standby*
Charging	*Normal*	*According to the battery level display*				*(maximum LED flash2)*
	Alarm	*According to the battery level display*				
	Fully charged	*ON*	*ON*	*ON*	*ON*	*(maximum LED ON)*
	Overvoltage Protection	*ON*	*OFF*	*OFF*	*OFF*	**LED4** *ON Stop charging*
	Overtemperature、overcurrent、Failure protection	*OFF*	*OFF*	*OFF*	*OFF*	*Stop charging and discharging*
Discharging	*Normal*	*According to the battery level display*				*/*
	Alarm					
	Under-voltage protection	*OFF*	*OFF*	*OFF*	*Flash1*	**LED1** *Flash1 Stop discharging*
	Overcurrent, short circuit, reverse connection, temperature, and failure protection	*OFF*	*OFF*	*OFF*	*OFF*	*Stop charging and discharging*

3.4 Capacity LED Indicate

State		*Charging*				*Discharging*			
LED		*LED4*	*LED3*	*LED2*	*LED1*	*LED4*	*LED3*	*LED2*	*LED1*
SOC（%）	*0~25%*	*OFF*	*OFF*	*OFF*	*Flash2*	*OFF*	*OFF*	*OFF*	*ON*
	25~50%	*OFF*	*OFF*	*Flash2*	*ON*	*OFF*	*OFF*	*ON*	*ON*
	50~75%	*OFF*	*Flash2*	*ON*	*ON*	*OFF*	*ON*	*ON*	*ON*
	75~100%	*Flash2*	*ON*	*ON*	*ON*	*ON*	*ON*	*ON*	*ON*

3.5 LED Flash Mode

Mode	ON	OFF
Flash 1	*0.25S*	*3.75S*
Flash 2	*0.5S*	*0.5S*
Flash 3	*0.5S*	*1.5S*

4. Installation and Configuration

4.1 Preparations for installation

This system can only be installed by trained personnel who have been trained in the power supply system and have sufficient knowledge of the power system.

The local safety regulations listed below should always be followed during the installation.

- *All circuits connected to this power system with an external voltage of less than 48V must meet the SELV requirements defined in the IEC60950 standard.*
- *If operating within the power system cabinet, make sure the power system is not charged. Battery devices should also be switched off.*
- *Distribution cable wiring should be reasonable and has protective measures to avoid touching these cables during the operation of power equipment.*
- *When installing the battery system, must wear the protective items below:*


The isolation gloves


Safety goggles


Safety shoes

4.1.1 Environmental requirements

- *Working temperature: -20°C~+55°C*
    1) *Charging temperature range is 0°C ~+55°C;*
    2) *Discharging temperature range is -20°C ~+55°C;*
- *Relative humidity: 20% ~ 80%RH (No condensed water);*
- *Operating environment: Indoor installation, sites avoid the sun and no wind, no conductive dust and corrosive gas. And the following conditions are met:*
    1) *Installation location should be away from the sea to avoid brine and high humidity environment;*
    2) *The ground is flat and level;*
    3) *There is no flammable explosive near to the installation places. The optimal ambient temperature is 15°C ~ 30°C;*
    4) *Keep away from dusty environments.*

4.1.2 Tools

The following tools and meters that may be used for installation


Screwdriver (word, cross)


Inclined pliers


Wrench


Needle nose pliers


Wire stripper


Clamp meter


Insulating tape


Multimeters

4.1.3 Technical Preparation

Devices connected directly to the battery can be user equipment, power supplies, or other power supplies.

- *Confirm whether the user equipment, the PV equipment or other power supply equipment has the DC standby interface, and measure whether the output voltage of the standby interface meets the requirements of the voltage range;*
- *Verify that the maximum discharge current capacity of the user equipment, the PV equipment or other power supplies, the DC standby interface, and the maximum discharge current shall be greater than the maximum charging current of the products;*
- *If the user equipment DC prepared interface maximum discharge capacity is less than the maximum charging current product, the user interface should have the power equipment of DC limiting function, prioritizing the normal work of user equipment.*
- *Firefighting equipment, such as portable dry powder fire extinguishers, should be provided near the equipment.*
- *An automatic fire fighting system shall be provided for the case where necessary. No flammable, explosive or other dangerous articles are placed beside the battery.*

4.1.4 Open the Package and Inspection

- *When the equipment arrives at the installation site, loading and unloading should be carried out according to the rules and regulations, so as to prevent from being exposed to sun and rain.*
- *Before unpacking, the total number of packages shall be indicated according to the shipping list attached to each package, and the case shall be checked for good condition*
- *In the process of unpacking, handle with care and protect the surface coating of the object.*
- *Open the package, the professional installation person should read the technical documents, verify the list, according to the configuration table and packing list, and ensure objects are complete and intact. If the internal packaging is damaged, it must be inspected and recorded in detail.*

 Battery x 1 pcs	 User Manual x 1 pcs	 Test report x 1 pcs	 Battery cable x 1 pair
 M6*50 expansion bolt x 4 pcs	 Wall mounted bracket x 1 pcs	 WIFI stick x 1 pcs	 Warranty Terms and Conditions x 1 pcs
 Inverter communication cable x 3pcs	 Back support bracket x 4 pcs	 M6x14 screws x 8pcs	 Certificate x 1 pcs
 Stacking brackets x 4 pcs (Optional)	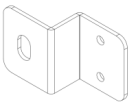 Floor mounting bracket x 2 pcs (Optional)		

4.2 Installation

4.2.1 Pack Installation Requirement

PACK has two interfaces: positive and negative power terminals and communication interfaces. Since the system works under high voltage and high current conditions, the high and low voltage interfaces must be connected in a safe and reliable way:

- *The connecting cable/busbar shall meet the requirements of the maximum continuous charging and discharging current;*
- *Each joint must be safe and reliable to ensure that there will be no loose, virtual contact problems, close to zero contact resistance, joint must have corrosion resistance, wear resistance, vibration resistance;*
- *All kinds of connections must meet the requirements of relevant national standards, strictly prevent all forms of arc discharge;*

- *Strictly prevent any form of short circuit in the process of connection;*
- *All the power connections in the battery pack must be adequately insulated to ensure that the positive and negative terminals of the battery will not contact the outer box and cause leakage or short circuit under any circumstances. At any time, it must be absolutely guaranteed that the positive and negative terminals of the battery system will not directly short circuit, otherwise it may cause major safety and electric shock accidents.*
- *It is strictly prohibited to operate with bare hands without wearing protective equipment.*
- *All connections must be made under clear guidance, and any form of conjecture and fuzzy attempt are strictly prohibited;*
- *The key points of connection are as follows: Ensure that the connection is correct, reliable (not loose), good contact, and no short circuit in the whole process;*
- *After the connection is completed, it must be measured and confirmed point by point;*
- *All connection points must ensure that no contact with the outer box or other parts, short circuit;*
- *If there are other uncertain factors, it is necessary to consult professionals to confirm before*

4.2.2 Installation Step

- **Step 1**：*Draw the screw hole positions on the wall;*
- **Step 2**：*Align the bracket with the screw holes on the wall and secure it to the wall with expansion screws;*
- **Step 3**：*Lift the battery and mount it onto the wall-mounted bracket;*
- **Step 4**：*Connect the battery power cable to the inverter;*
- **Step 5**：*Connect the communication cable to the inverter;*
- **Step 6**：*Inverter parameter setting;*
- **Step 7**：*Turn on the battery and check the battery condition;*

Automatic address allocation during parallel operation: After parallel communication cable is connected as shown in the diagram, turning on any battery will wake up all the online batteries (provided the self-locking switch is active) and reassign addresses in sequence.

4.2.3 Connection Diagram

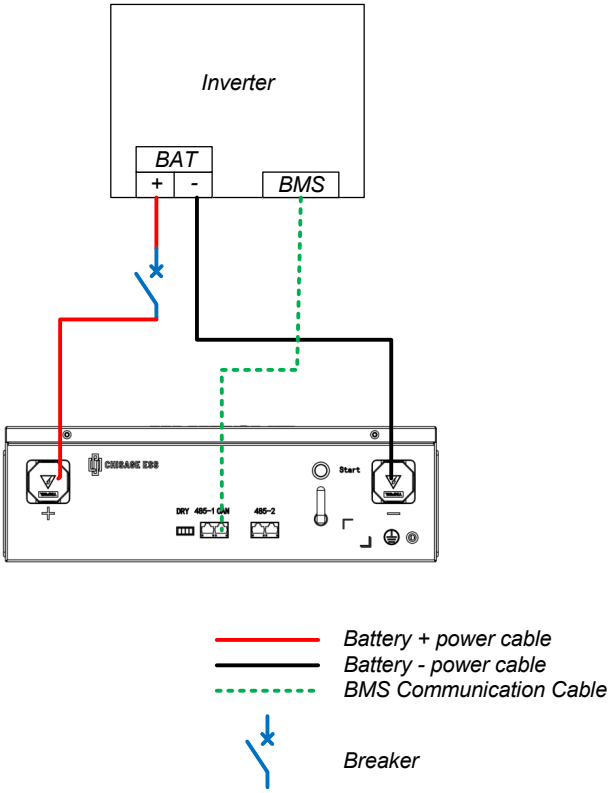

Fig. 4-1 Single Trit5-W Pro + single inverter diagram

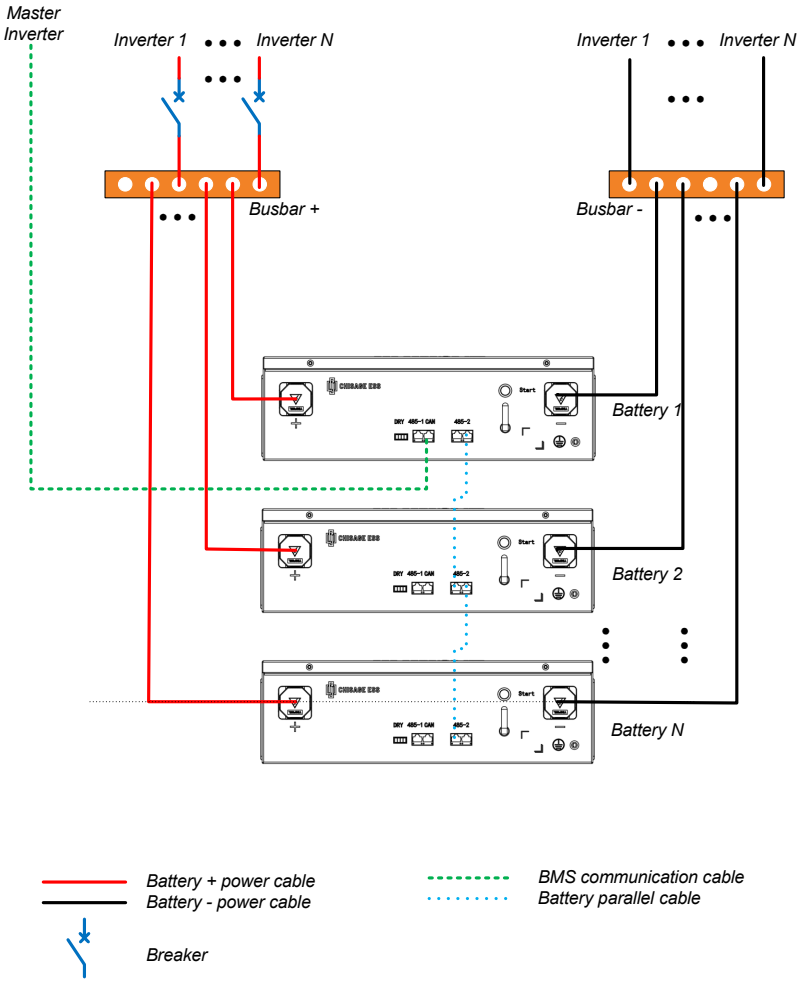

Fig. 4-2 Multi Trit5-W Pro + multi inverter diagram

5. Transportation and Storage

5.1 Transportation

During transportation, it should be protected from violent vibration, shock, sun exposure, and rain and must not be inverted to ensure that no short circuit occurs. In the process of loading and unloading, it should be handled with care to prevent falling, rolling, heavy pressure, and inversion.

5.2 Storage

Product storage requirements are as follows:

- *When the battery PACK is long time stored, the battery should be charged to 60% SOC.*
- *Electrical box products should be stored in a dry and ventilated environment with a temperature not exceeding 50°C and relative humidity less than 80%. For inflammable and explosive items, avoid places with a lot of dust and metal powder, and avoid contact with acid or other corrosive gases;*
- *The storage location of electric box products should be protected from rain, moisture, and sun protection.*
- *Storage temperature: The storage temperature range is -10°C~35°C. If it is expected to be stored for more than 1 month and not more than 6 months, you should do a charge and discharge in advance and adjust the SOC to 20% to 50%. Zhejiang Chisage New Energy Technology Co., Ltd. will not be responsible for the loss of capacity or other losses if the storage SOC exceeds the range of 20-50% or the storage for more than 6 months without charge and discharge maintenance.*

6. Operation and Maintenance

6.1 Accident Handling

When an exception or accident occurs to the battery set, take proper and effective measures in time to prevent further damage and loss.

Overheat:

Under normal circumstances, when the battery overheats and cannot be cooled to the target temperature within the specified time or the temperature of the battery exceeds the safe use limit, the management system should give a warning and require the battery to stop use immediately. In this case, the battery should be stopped immediately and the relevant technical personnel should be informed to carry out a comprehensive inspection and troubleshoot before continuing to use.

Electrical leakage:

In the process of use, if the battery leakage phenomenon is found, the surrounding personnel must be evacuated immediately, and immediately notify the relevant technical personnel on site to deal with the problem, before continuing to use, it is strictly prohibited to continue using a faulty battery, forced to continue to use.

Overdischarge:

When the battery pack is used up, the overall voltage is too low or the voltage of some batteries is lower than the normal operating voltage range, the management system should give a warning and require the battery to stop using immediately. In this case, the discharge of the battery should be stopped immediately and the battery should be charged. Do not discharge the battery forcibly at this time. It will damage the performance of the battery. In serious cases, the battery may be permanently damaged and cannot be used any longer.

Short Circuit:

In the case of battery short circuit caused by various reasons, the surrounding personnel must be evacuated immediately, the relevant power supply and electrical equipment should be cut off (if possible), the connection between the battery and the system should be disconnected immediately, and the relevant technical personnel should be informed immediately on site to repair and troubleshoot the fault. The battery that has been seriously short-circuited cannot be used again and must be comprehensively tested by the Zhejiang Chisage New Energy Technology Co., Ltd. Before deciding whether part of the maintenance can be continued.

Combustion:

In case of battery set burning accident caused by various reasons, the surrounding personnel must be evacuated immediately. Meanwhile, no irrelevant personnel shall be allowed near the accident site within the safety range (due to the possibility of explosion). After extinguishing the fire, the personnel wearing necessary protective equipment shall first cut off the power connection line. Only when the resistance of the battery pack is fully discharged (the voltage

reaches zero volts), remove the battery pack for subsequent analysis.

Battery Collision:

If the battery is collided, deformed or impaled by foreign matter due to various reasons, disconnect the power cable of the battery immediately and notify professional technicians to handle it on site. If the battery needs to be removed, the personnel wearing necessary protective equipment should discharge the battery fully before removing the battery.

Other Accidents:

When the battery system needs to be repaired or removed due to other accidents, disconnect the battery circuit first to ensure that the battery will not be short-circuited, and remove the battery pack to ensure that the battery pack will not be damaged by collision, fall, upside down, etc. If such a situation occurs, please refer to the above provisions for handling.

If necessary, you can consult the after-sales service staff of Zhejiang Chisage New Energy Technology Co., Ltd.

6.2 Maintenance

The customer is obligated to prepare a reasonable maintenance plan, such as monthly dust removal, battery performance check, software adjustment, etc., to ensure the normal use of the product.

- *PACK maintenance cycle: 3 months/time is recommended (maintenance record form is required)*
- *PACK maintenance method: Charge with charging and discharging equipment to ensure that the battery power is maintained at 10%SOC~90%SOC.*
- *Notes for charging: 1) Special charging/discharging equipment must be used 2) equipment precision voltage < 0.15%, current < 0.35% 3) Operation must be strictly in accordance with the charging process.*
- *Discarded products must be recovered by qualified personnel designated by Zhejiang Chisage New Energy Technology Co., Ltd. It is strictly prohibited to discard them at will, which may lead to safety accidents or serious environmental pollution.*

Zhejiang Chisage New Energy Technology Co., Ltd.

Tel: +86 150 5749 1826

Email: info@chisagess.com

Web: www.chisagess.com

Add: No.1828, Fuqing South Road, Panhuo Street, Yinzhou District, Ningbo City, Zhejiang Province, China 315000